LIS 2013 FuG 13b

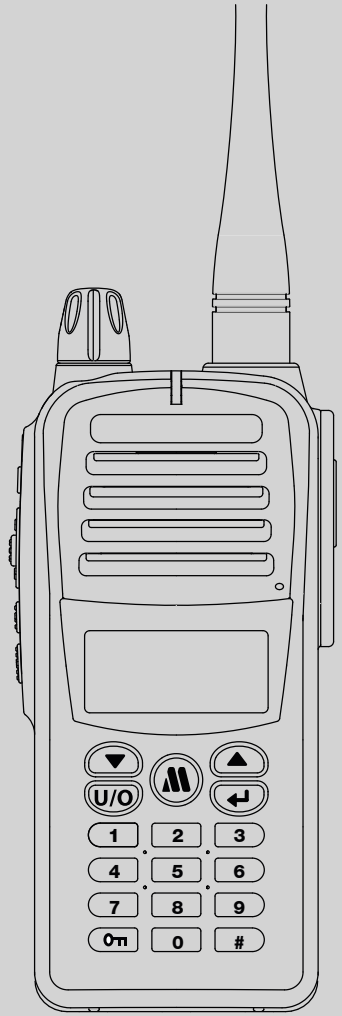

Service Manual

Table of contents

1. **TECHNICAL SPECIFICATIONS** 1
   - *MEASURE IN ACCORDING TO FTZ_17R_TR_2049* 1
2. **CIRCUIT DESCRIPTIONS** 2
   - *TRANSMISSION UNIT* 2
     - PRE-AMPLIFIER 2
     - RF POWER AMPLIFIER 2
     - ANTENNA SWITCH 2
     - HARMONIC FILTER 2
     - APC (AUTO POWER CONTROL) 2
     - HIGH/LOW POWER CONTROL 2
   - *RECEPTION UNIT* 2
     - FRONT-END 2
     - BACK-END 3
   - *FREQUENCY SYNTHESIZER* 3
     - SYNTHESIZER 3
     - VCO 3
   - *VOLTAGE MULTIPLIER* 3
   - *AUDIO UNIT* 3
     - AUDIO FILTER 3
     - AUDIO AMPLIFIER 3
     - SQUELCH CONTROL CIRCUIT 3
     - TX AUDIO 4
   - *MICRO-CONTROLLER UNIT* 4
   - *DIGITAL CONTROL* 4
     - POWER SUPPLY CIRCUIT 4
3. **ALIGNMENT** 5
   - *GETTING STARTED* 5
     - VCO ADJUSTMENT 8
     - FREQUENCY ERROR ALLGNMENT 8
     - DEVIATION ADJUSTMENT 8
     - HIGH POWER CHECKING 8
     - LOW POWER CHECKING 8
   - *SENSITIVITY* 8
     - AUDIO OUTPUT 8
     - SQUELCH ADJUSTMENT 8
     - RSSI SIGNAL LEVEL CHECK 8
     - BATTERY LOW DETECTION 8
4. **BLOCK DIAGRAM** 9
   - *LOGIC CONTROL UNIT* 9
   - *RF UNIT* 9
5. **SCHEMATIC** 9
     - POWER SUPPLY 9
     - FRONT-END 9
     - 1ST IF & MIXER 10
     - SECOND IF 10
     - AUDIO FILTER 10
     - AUDIO AMPLIFIER 10
     - MODULATION 11
     - SYNTHESIZER 11
     - VCO 11
     - TX BUFFER 11
     - RF POWER AMPLIFICATION 12
   - *LOGIC CONTROL* 13
6. **PCB VIEW** 14
   - *LOGIC BOARD* 14
   - *RF BOARD* 15
7. **BILL OF MATERIALS** 16
8. **EXPLOSION** 23

1. TECHNICAL SPECIFICATIONS

MEASURE IN ACCORDING TO FTZ_17R_TR_2049

GENERAL		
Characteristics	**Units**	**Value**
Frequency		LVHF(4-m) VHF (2-m)
Channel Spacing	KHz	20
Power Source	V	7.2V
Frequency Stability (-30°C to +60°C)	ppm	±2.5
Modulation Type		14K0F3E
Antenna Impedance	Ω	50
Speaker Impedance	Ω	4
Microphone Impedance	Ω	2K
Operation Temperature	°C	-30 to +60
Relative Humidty	%	90
Battery Duty Life @ 5-5-90 Duty Cycle	Hr	>8

TRANSMITTER			
RF Power (H)		W	5.0W (≥4.0W≤6.0W)
RF Power (L)		W	1.0W (≥1.0W≤1.3W)
Max Deviation		KHz	≤ ±4.0 @20KHz
Adjacent Channel Power Attenuation		dB	≥ 70
Spurious Emissions & Harmonic		dBm	≤ -36dBm from 9KHz to1GHz ≤ -30dBm from 1GHz to 4GHz
Audio Distortion		%	≤ 3
Audio Response Ref：1KHz	300Hz~400Hz	dB	+1.0 to -3.0
	400Hz~2.7KHz	dB	±1.5
	2.7KHz~3.0KHz	dB	+1.0 to -3.0
FM Noise (W/O CCITT)		dB	≥ 40
Mic Sensitivity		mV	≥ 3.4 ≤ 8.0

RECEIVER			
Characteristic		**Units**	**Value**
Configuration			Double Conversion Superheterodyne 1st IF (45MHz),2nd IF (455KHz)
Sensitivity @20dB SINAD		dB	≤ 0.6uV (With CCITT)
Squelch Sensitivity		dB	@ 16dB SINAD (Step L3)
Blocking	≥±100KHz	dBuV	≥ 87
	≥±200KHz	dBuV	≥ 90
	≥±500KHz	dBuV	≥ 93
Spurious Emission		dBm	≤ -57 from 9KHz to 1GHz ≤ -47 from 1GHz to 4GHz
FM Noise (W/o CCITT)		dB	≥ 45
Spurious Response Rejection		dB	≥ 70
Max Audio Output THD 7%		W	≥ 0.5 (4Ω)
Audio Distortion		%	≤ 3
Audio Response Ref：1KHz	300Hz~400Hz	dB	+1.0 to -1.5
	400Hz~2.7KHz	dB	+1.0 to -1.5
	2.7KHz~3.0KHz	dB	+1.0 to -3.0
Standby Current Drain		mA	60 (without power save) 30 (Power save 1:1) 15 (Power save 1:1)

MECHANICAL SPECIFICATIONS		
Dimensions	mm	126.5HX60.5WX44.5D
Weight	Kg	0.38
Shock Resistance		Meets MIL STD 810 C/D/E/F
Moisture & Dust Resistance		According to the IEC529 &IP54 Regulations

2. CIRCUIT DESCRIPTIONS

TRANSMISSION UNIT

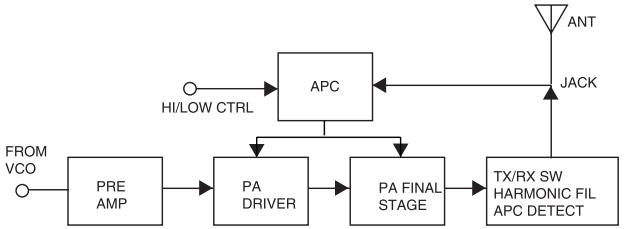

• PRE-AMPLIFIER

The pre-amplifier consists of **Q807** & **Q808**. The VCO output signal is applied to pre-amplifier (Q807 & Q808), to obtain a level above 14dBm, while operating in the frequency range of 135MHz to 174MHz. The **T5V** supplies a 5V to pre-amplifier **Q810 & Q809** are turned on by T5V. The TX5 supplies a 5V to Q807 & Q808.

• RF POWER AMPLIFIER

The output signal of pre-amplifier provided the drive stage **Q801 (RD01MUS1)** and power amplifier **Q802 (2SK3476)**, to obtain Rf power above 6 watts. Its current drain is less than 2000mA, while operating in the frequency range of 135MHz to 174MHz.

• ANTENNA SWITCH

Antenna switch circuit consists of two PIN diode (**D801, D802**), transistor(**Q803**), and network(**C810 L814 C832**). In TX mode, TX5 supplies a High level to turn on **Q803 & Q804**, 5V bias is applied to the switch circuit to bias two diodes on.

The shunt diode(**D802**) shorts out the receiver port and a high impedance between L814 and harmonic filter.

In receive mode, the diodes are both off so it will form a low attenuation path between antenna and receiver ports.

• HARMONIC FILTER

Harmonic filter consists of **C807, C806, L803, C805, L802, C804, C803, L801 & C801** to form three poles low pass filter to attenuate harmonic energy of the transmitter.

• APC (AUTO POWER CONTROL)

Transmitter with feedback voltage which controls driver stage**(Q802)** and final stage**(Q801**), stabilize rf output power. The feedback voltage is formed by **D803** and **D805**, to provide the U801(B) amplifier and voltage reference(A). It controls two stages, **Q801** & **Q802**, to get bias voltage and forms an auto level control to stabilize transmitter output power.

• HIGH/LOW POWER CONTROL

PWM (pulse width modulation) which produce basically digital waveforms, the PWM level is fed to RC filter which is composed of **R888, R885, C841, C843** to change **U801A** pin 1 voltage for control RF power.

RECEPTION UNIT

• FRONT-END

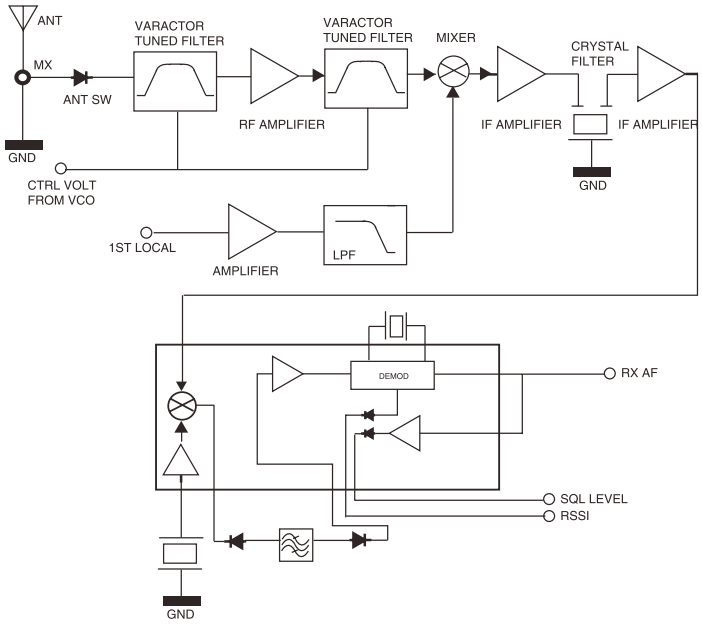

RF signal is fed through antenna into low pass filter, which is composed of **C801, C802, L801, C803, C804, L802, C805, C806, L803, C807**, then goes into TX/RX antenna switch, which is composed of 2 PIN diode (**D801, D802**), transistor (**Q803**) and network (**C810, L814, C832**). RF signal is coupling with **C701** to varactor tuned band pass filter, which is composed of **L701, L702, C702, C703, C704 & D701,D702,** to change varactor diode (**D701, D702**) voltage to tune band pass filter shift band.

The control voltage of band pass filter is supplied from Q504, the voltage is controlled by VCO. The output signal of band pass filter is provided with RF amplifier transistor (**Q701**), the **C710** coupling into second band pass filter, which is composed of **L704, C711, C783, C712, L705, C713, C714, C715, C784, L706, C716, D704,& D705**. The **Q504** is controlled by VCO.

The voltage of Q504 controls the second varactor tuned band pass filter (**D704, D705**) band shift. The signal of RF amplifier and band pass filter are fed through **C717** coupling into double balance mixer. The signal comes from **T701**, matching with **D706, D707, D708,& D709**. The first local signal comes from VCO output, then into local amplifier Q702 and low pass filter, the Low Pass Filter is composed of **C730, L710, C731, L711, C732**, the signal coupling with **C733** into transformer (T702) matching with **D706, D707, D708, D709**, The VCO using a high side injection the RF signal is down-converted to 45MHz IF signal , the signal output from **T701**. The IF signal output comes from mixer through **L715, C734 & C735**, coupling to RF signal attenuate and depress loop circuit, which is composed of **L713**, C738, R715, L714, C736, C737, and then, through IF amplifier (Q703) applied to crystal filter to provide necessary selectivity and intermodulation protection.

• BACK-END

IF signal goes through IF amplifier **Q704, C747, L716,& C748** and it matches with **U701** pin 16 (IF). U701 pin 1 feeds second local frequency **44.545MHz** , there are two signals coming internal mixer. 2nd IF signal goes through U701 internal amplifier. And applies to demodulator, which used a ceramic discriminator to detect audio signal. U701 pin 9 recovers audio output. U701 pin12 supplies a received signal-strength indicator (RSSI) to microprocessor (U102), RSSI supplied received signal strength level to shown on LCD indicator. U701 functions have a noise amplifier and a noise detector level for microprocessor to control the squelch. The noise signal comes from demodulator (U701 pin9), then pass through **R738**, **C761** and then applied to pin 8 through internal noise amplifier. Noise detector supplies noise voltage for microprocessor (U101) to control squelch.

FREQUENCY SYNTHESIZER

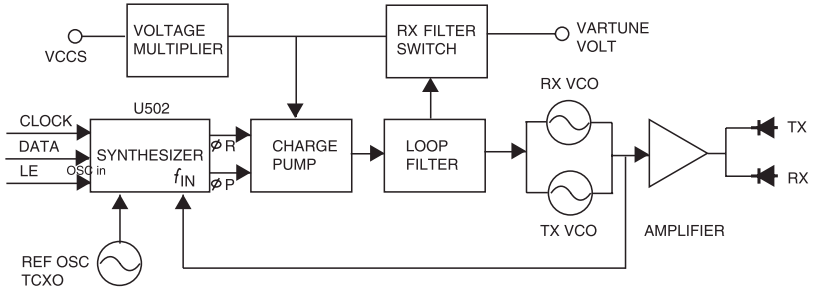

• SYNTHESIZER

The PLL frequency synthesizer **U502** contains prescaler , phase detector, internal dividers, reference counter, there are controlled by micro-controller Clock, Data, LE

VC-TCXO assures that the frequency remains stable across the temperature range (typically ± 2.5 ppm). besides VC-TCXO provide a modulation port for the sub tone modulation system.

The reference frequency (VC-TCXO) goes through U502 internal programmer to 2.5KHz or 3.125KHz, and then goes through phase comparator to gain a ØR signal from pin 16 (U502). The VCO provides a feedback signal match to U502 (pin 8 F-in), the port including a pre-scale N counter a counter,& swallow counter, to control VCO frequency divider to 2.5KHz or 3.125KHz. And then, goes through phase comparator to catch ØP signal output from pin5 (U502).

ØR & **ØP** signals applied to charge pump Q503 Q502 controls the loop filter, whose circuit consists of R514 C511. Then charge pump voltage pass to low pass filter, The low pass filter consists of **R512 C512 R513 C513**, supply a necessary DC steering voltage for VCO to gain a stable local-oscillation frequency.

• VCO

1. RX VCO

The RX VCO includes transistor **Q602**, coil **L604, C611**, Varicap **CT601** and two varactors **D605** and **D606**, it is configured as a colpitts oscillator. its complexity comes from the balance between wide band and low noise needs. the resonant circuit produces a different frequency with a change in dc voltage controlled by the tuning voltage signal present at the cathode of D605 and D606, the local oscillator signal is applied to the amplifier Q601. D601 is a dual diode, when 1 of 2 is reverse biased the other one is forward biased. Due to D601, the lo signal is applied to the mixer.

2. TX VCO

The TX VCO comprises transistor **Q603**, Coil **L607**, Capacitor **C621**, Varicap **CT602** and varactor **D603** and **D604**, it is configured as a colpitts oscillator. the resonant circuit produces a different frequency with change in dc voltage controlled by the tuning voltage signal present at the cathode of D603 and D604. the AF signal from R613 to the cathode of **D602** to produce FM modulation, the signal is applied to amplifier **Q601**.

RX and TX power line filters transistor **Q606** is configured as a 5V power supply ripple filter, the filter reduces the noise on the carrier and local oscillator signals.

VOLTAGE MULTIPLIER

Voltage multiplier circuit consist of IC (**U501**), diode (**D501, D502**), **R501, R502, C502,& C503**. The DC/DC is set up to 10V. It goes through ripple filter (**Q501**) supply the charge pump (**Q502, Q503**) to control TX/RX VCO. VCO controls RX front-end band pass filter switch by **Q504**.

AUDIO UNIT

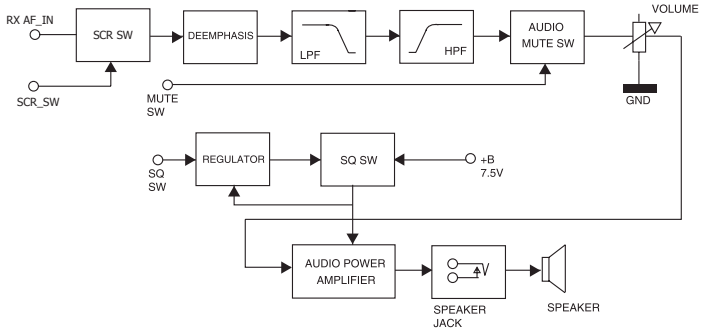

• AUDIO FILTER

The audio output signal of the demodulator and scr sw provides to low pass filter circuit.

The circuit is composed of **C319, R317, C320, R318, R319, C321,& IC (U302A**), and then applied to low pass filter, which is composed of **R320, C322, R321, C323, R322, C324,& IC (U302B)**. The function of low pass filter is to attenuate 3KHz above audio signal.

• AUDIO AMPLIFIER

The audio signal is passed to low pass filter, which is composed of IC (**U302**), applied to audio mute switch control , then passed to volume control (**VR301**), applied to audio amplifier (**U301**), in the end, through **C318** to activate the speaker (**SP301**) by speaker jack (**J302**). The audio output power is more than 0. 5W at 7% distortion.

• SQUELCH CONTROL CIRCUIT

The noise signal of the demodulator output goes through **R738, C761**, into a tank, which is composed of **C760, L71**8, and then goes through **U701** internal noise amplifier, the noise amplifier provide noise signal voltage from U701 pin13 is applied to MCU U101 pin29 (A/D) sampling; in the end, by SQ SW (**U202**) pin11 to turn on transistors(Q302, Q303) and to

control audio power amplifier (**U301**). The mute control switch is achieved with U202 pin 12 to control transistor (**Q301**) to mute demodulator signal. The U202 control by MCU(U101).

• TX AUDIO

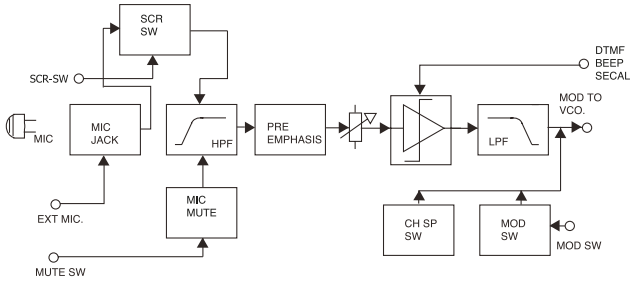

The audio signal is passed to high pass filter from microphone jack and scr sw, the high pass filter contains **C402, C403, C404, R413, R414 & U401(A)**, and then the signal gets into C405, R403, U401 (2/4) amplifier to an adjustment VR401 to limit modulation deviation,
The U401(C) is limiter & combiner.
The U401(D) is low pass filter.
Q401 & Q402 control deviation channel spacing. Q403 controls microphone mute circuit.
Q404 that is control modulation level.

MICRO-CONTROLLER UNIT

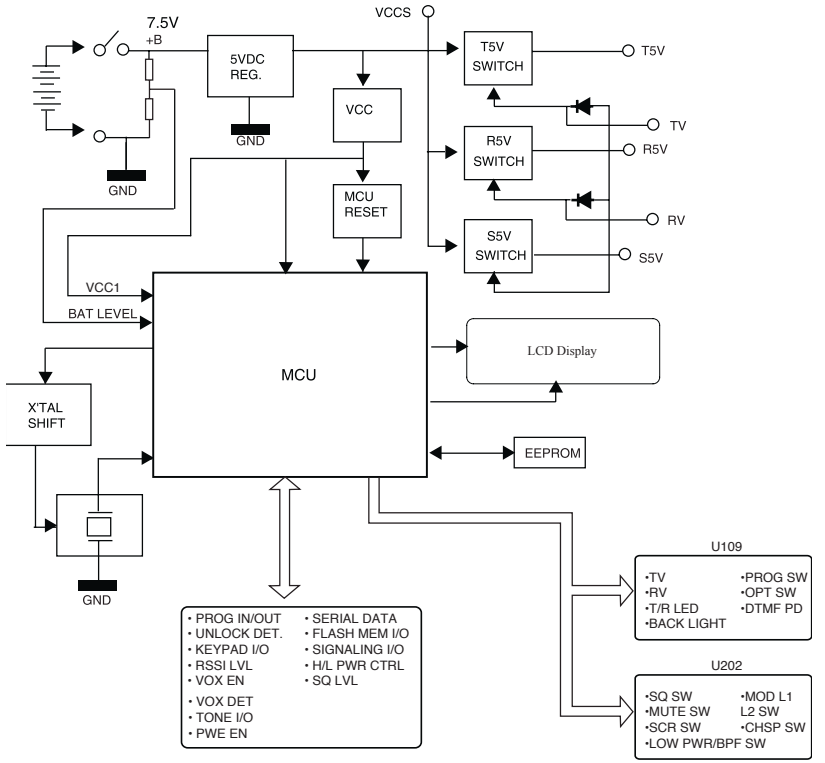

DIGITAL CONTROL

MCU (U101) is an 8-bit micro-processor with 64KB ROM & 2KB RAM memory.
Micro-processor functions as following:

- LCD driver.
- EPROM programming read/write.
- TX / RX mode control.
- Keypad I/O control.
- PTT (Push To Talk) control.
- RSSI Indicator of radio signal-strength.
- Squelch control.
- MCU clock shift control.
- Series clock and data control.
- Hi / Lo power & power enable control.
- Indicator of battery capacity.

• POWER SUPPLY CIRCUIT

The Power energy is from 7.5VDC NI-MH or li-ion battery pack which offer to audio power amplifier & TX PA unit supplies to regulator (U201) for obtain converted 5VDC (VCCS) supply for digital, Q201 (T5V), Q202 (R5V), Q203 (S5V) and TX5.

3. Alignment

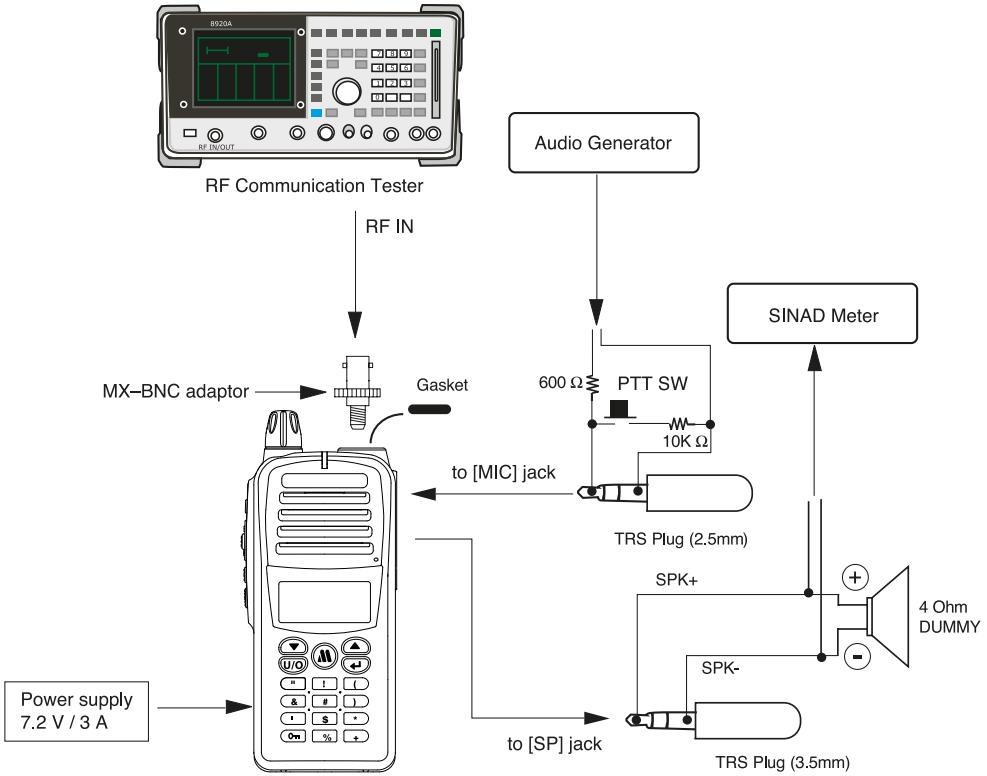

GETTING STARTED

please remove gasket on mx connector, connects the antenna jack to RF communication tester by MX-BNC adaptor. To follow above installation setup carefully.
Firstly, please program the radio same as alignment channel setting.
To open the FuG 13B setting from programming software, following channel will appear
Operator can press Up/Down button to select the channel during alignment.

		Frequency		Pwr			CH spacing		Zone
CH	TAG	Low	Hi	H/L	MON	TOT	TX	RX	
1	347	74.21500	84.01500	H	Normal	120Sec	M	M	Zone1
2	348	74.23500	84.03500	H	Normal	120Sec	M	M	Zone1
3	349	74.25500	84.05500	H	Normal	120Sec	M	M	Zone1
4	350	74.27500	84.07500	H	Normal	120Sec	M	M	Zone1
5	351	74.29500	84.09500	H	Normal	120Sec	M	M	Zone1
6	352	74.31500	84.11500	H	Normal	120Sec	M	M	Zone1
7	353	74.33500	84.13500	H	Normal	120Sec	M	M	Zone1
8	354	74.35500	84.15500	H	Normal	120Sec	M	M	Zone1
9	355	74.37500	84.17500	H	Normal	120Sec	M	M	Zone1
10	356	74.3950	84.19500	H	Normal	120Sec	M	M	Zone1
11	357	74.4150	84.21500	H	Normal	120Sec	M	M	Zone1
12	358	74.4350	84.23500	H	Normal	120Sec	M	M	Zone1
13	359	74.4550	84.25500	H	Normal	120Sec	M	M	Zone1
14	360	74.4750	84.27500	H	Normal	120Sec	M	M	Zone1
15	361	74.4950	84.29500	H	Normal	120Sec	M	M	Zone1
16	362	74.5150	84.31500	H	Normal	120Sec	M	M	Zone1
17	363	74.5350	84.33500	H	Normal	120Sec	M	M	Zone1
18	364	74.5550	84.35500	H	Normal	120Sec	M	M	Zone1
19	365	74.5750	84.37500	H	Normal	120Sec	M	M	Zone1
20	366	74.5950	84.39500	H	Normal	120Sec	M	M	Zone1
21	367	74.6150	84.41500	H	Normal	120Sec	M	M	Zone1
22	368	74.6350	84.43500	H	Normal	120Sec	M	M	Zone1
23	369	74.6550	84.45500	H	Normal	120Sec	M	M	Zone1
24	370	74.6750	84.47500	H	Normal	120Sec	M	M	Zone1
25	371	74.6950	84.49500	H	Normal	120Sec	M	M	Zone1
26	372	74.7150	84.51500	H	Normal	120Sec	M	M	Zone1
27	373	74.7350	84.53500	H	Normal	120Sec	M	M	Zone1
28	374	74.7550	84.55500	H	Normal	120Sec	M	M	Zone1
29	375	74.7750	84.57500	H	Normal	120Sec	M	M	Zone1
30	376	0.0000	84.59500	H	Normal	120Sec	M	M	Zone1
31	377	0.0000	84.61500	H	Normal	120Sec	M	M	Zone1
32	378	0.0000	84.63500	H	Normal	120Sec	M	M	Zone1
33	379	0.0000	84.65500	H	Normal	120Sec	M	M	Zone1
34	380	0.0000	84.67500	H	Normal	120Sec	M	M	Zone1
35	381	0.0000	84.69500	H	Normal	120Sec	M	M	Zone1
36	382	0.0000	84.71500	H	Normal	120Sec	M	M	Zone1
37	383	0.0000	84.73500	H	Normal	120Sec	M	M	Zone1
38	384	0.0000	84.75500	H	Normal	120Sec	M	M	Zone1
39	385	0.0000	84.77500	H	Normal	120Sec	M	M	Zone1
40	386	0.0000	84.79500	H	Normal	120Sec	M	M	Zone1
41	387	0.0000	84.81500	H	Normal	120Sec	M	M	Zone1
42	388	0.0000	84.83500	H	Normal	120Sec	M	M	Zone1

CH	TAG	Frequency		Pwr	MON	TOT	CH spacing		Zone
		Low	Hi	H/L			TX	RX	
43	389	0.0000	84.85500	H	Normal	120Sec	M	M	Zone1
44	390	0.0000	84.87500	H	Normal	120Sec	M	M	Zone1
45	391	0.0000	84.89500	H	Normal	120Sec	M	M	Zone1
46	392	0.0000	84.91500	H	Normal	120Sec	M	M	Zone1
47	393	0.0000	84.93500	H	Normal	120Sec	M	M	Zone1
48	394	0.0000	84.95500	H	Normal	120Sec	M	M	Zone1
49	395	0.0000	84.97500	H	Normal	120Sec	M	M	Zone1
50	396	0.0000	84.99500	H	Normal	120Sec	M	M	Zone1
51	397	75.2150	85.01500	H	Normal	120Sec	M	M	Zone1
52	398	75.2350	85.03500	H	Normal	120Sec	M	M	Zone1
53	399	75.2550	85.05500	H	Normal	120Sec	M	M	Zone1
54	400	75.2750	85.07500	H	Normal	120Sec	M	M	Zone1
55	401	75.2950	85.09500	H	Normal	120Sec	M	M	Zone1
56	402	75.3150	85.11500	H	Normal	120Sec	M	M	Zone1
57	403	75.3350	85.13500	H	Normal	120Sec	M	M	Zone1
58	404	75.3550	85.15500	H	Normal	120Sec	M	M	Zone1
59	405	75.3750	85.17500	H	Normal	120Sec	M	M	Zone1
60	406	75.3950	85.19500	H	Normal	120Sec	M	M	Zone1
61	407	75.4150	85.21500	H	Normal	120Sec	M	M	Zone1
62	408	75.4350	85.23500	H	Normal	120Sec	M	M	Zone1
63	409	75.4550	85.25500	H	Normal	120Sec	M	M	Zone1
64	410	75.4750	85.27500	H	Normal	120Sec	M	M	Zone1
65	411	75.49500	85.29500	H	Normal	120Sec	M	M	Zone1
66	412	75.51500	85.31500	H	Normal	120Sec	M	M	Zone1
67	413	75.53500	85.33500	H	Normal	120Sec	M	M	Zone1
68	414	75.55500	85.35500	H	Normal	120Sec	M	M	Zone1
69	415	75.57500	85.37500	H	Normal	120Sec	M	M	Zone1
70	416	75.59500	85.39500	H	Normal	120Sec	M	M	Zone1
71	417	75.61500	85.41500	H	Normal	120Sec	M	M	Zone1
72	418	75.63500	85.43500	H	Normal	120Sec	M	M	Zone1
73	419	75.65500	85.45500	H	Normal	120Sec	M	M	Zone1
74	420	75.67500	85.47500	H	Normal	120Sec	M	M	Zone1
75	421	75.69500	85.49500	H	Normal	120Sec	M	M	Zone1
76	422	75.71500	85.51500	H	Normal	120Sec	M	M	Zone1
77	423	75.73500	85.53500	H	Normal	120Sec	M	M	Zone1
78	424	75.75500	85.55500	H	Normal	120Sec	M	M	Zone1

CH	TAG	Frequency		Pwr	MON	TOT	CH spacing		Zone
		Low	Hi	H/L			TX	RX	
79	425	75.77500	85.57500	H	Normal	120Sec	M	M	Zone1
80	426	75.79500	85.59500	H	Normal	120Sec	M	M	Zone1
81	427	75.81500	85.61500	H	Normal	120Sec	M	M	Zone1
82	428	75.83500	85.63500	H	Normal	120Sec	M	M	Zone1
83	429	75.85500	85.65500	H	Normal	120Sec	M	M	Zone1
84	430	75.87500	85.67500	H	Normal	120Sec	M	M	Zone1
85	431	75.89500	85.69500	H	Normal	120Sec	M	M	Zone1
86	432	75.91500	85.71500	H	Normal	120Sec	M	M	Zone1
87	433	75.93500	85.73500	H	Normal	120Sec	M	M	Zone1
88	434	75.95500	85.75500	H	Normal	120Sec	M	M	Zone1
89	435	75.97500	85.77500	H	Normal	120Sec	M	M	Zone1
90	436	75.99500	85.79500	H	Normal	120Sec	M	M	Zone1
91	437	76.01500	85.81500	H	Normal	120Sec	M	M	Zone1
92	438	76.03500	85.83500	H	Normal	120Sec	M	M	Zone1
93	439	76.05500	85.85500	H	Normal	120Sec	M	M	Zone1
94	440	76.07500	85.87500	H	Normal	120Sec	M	M	Zone1
95	441	76.09500	85.89500	H	Normal	120Sec	M	M	Zone1
96	442	76.11500	85.91500	H	Normal	120Sec	M	M	Zone1
97	443	76.13500	85.93500	H	Normal	120Sec	M	M	Zone1
98	444	76.15500	85.95500	H	Normal	120Sec	M	M	Zone1
99	445	76.17500	85.97500	H	Normal	120Sec	M	M	Zone1
100	446	76.19500	85.99500	H	Normal	120Sec	M	M	Zone1
101	447	76.21500	86.01500	H	Normal	120Sec	M	M	Zone1
102	448	76.23500	86.03500	H	Normal	120Sec	M	M	Zone1
103	449	76.25500	86.05500	H	Normal	120Sec	M	M	Zone1
104	450	76.27500	86.07500	H	Normal	120Sec	M	M	Zone1
105	451	76.29500	86.09500	H	Normal	120Sec	M	M	Zone1
106	452	76.31500	86.11500	H	Normal	120Sec	M	M	Zone1
107	453	76.33500	86.13500	H	Normal	120Sec	M	M	Zone1
108	454	76.35500	86.15500	H	Normal	120Sec	M	M	Zone1
109	455	76.37500	86.17500	H	Normal	120Sec	M	M	Zone1
110	456	76.39500	86.19500	H	Normal	120Sec	M	M	Zone1
111	457	76.41500	86.21500	H	Normal	120Sec	M	M	Zone1
112	458	76.43500	86.23500	H	Normal	120Sec	M	M	Zone1
113	459	76.45500	86.25500	H	Normal	120Sec	M	M	Zone1
114	460	76.47500	86.27500	H	Normal	120Sec	M	M	Zone1

CH	TAG	Frequency		Pwr			CH spacing		Zone
		Low	Hi	H/L	MON	TOT	TX	RX	
115	461	76.49500	86.29500	H	Normal	120Sec	M	M	Zone1
116	462	76.51500	86.31500	H	Normal	120Sec	M	M	Zone1
117	463	76.53500	86.33500	H	Normal	120Sec	M	M	Zone1
118	464	76.55500	86.35500	H	Normal	120Sec	M	M	Zone1
119	465	76.57500	86.37500	H	Normal	120Sec	M	M	Zone1
120	466	76.59500	86.39500	H	Normal	120Sec	M	M	Zone1
121	467	76.61500	86.41500	H	Normal	120Sec	M	M	Zone1
122	468	76.63500	86.43500	H	Normal	120Sec	M	M	Zone1
123	469	76.65500	86.45500	H	Normal	120Sec	M	M	Zone1
124	470	76.67500	86.47500	H	Normal	120Sec	M	M	Zone1
125	471	76.69500	86.49500	H	Normal	120Sec	M	M	Zone1
126	472	76.71500	86.51500	H	Normal	120Sec	M	M	Zone1
127	473	76.73500	86.53500	H	Normal	120Sec	M	M	Zone1
128	474	76.75500	86.55500	H	Normal	120Sec	M	M	Zone1
129	475	76.77500	86.57500	H	Normal	120Sec	M	M	Zone1
130	476	76.79500	86.59500	H	Normal	120Sec	M	M	Zone1
131	477	76.81500	86.61500	H	Normal	120Sec	M	M	Zone1
132	478	76.83500	86.63500	H	Normal	120Sec	M	M	Zone1
133	479	76.85500	86.65500	H	Normal	120Sec	M	M	Zone1
134	480	76.87500	86.67500	H	Normal	120Sec	M	M	Zone1
135	481	76.89500	86.69500	H	Normal	120Sec	M	M	Zone1
136	482	76.91500	86.71500	H	Normal	120Sec	M	M	Zone1
137	483	76.93500	86.73500	H	Normal	120Sec	M	M	Zone1
138	484	76.95500	86.75500	H	Normal	120Sec	M	M	Zone1
139	485	76.97500	86.77500	H	Normal	120Sec	M	M	Zone1
140	486	76.99500	86.79500	H	Normal	120Sec	M	M	Zone1
141	487	77.01500	86.81500	H	Normal	120Sec	M	M	Zone1
142	488	77.03500	86.83500	H	Normal	120Sec	M	M	Zone1
143	489	77.05500	86.85500	H	Normal	120Sec	M	M	Zone1
144	490	77.07500	86.87500	H	Normal	120Sec	M	M	Zone1
145	491	77.09500	86.89500	H	Normal	120Sec	M	M	Zone1
146	492	77.11500	86.91500	H	Normal	120Sec	M	M	Zone1
147	493	77.13500	86.93500	H	Normal	120Sec	M	M	Zone1
148	494	77.15500	86.95500	H	Normal	120Sec	M	M	Zone1
149	495	77.17500	86.97500	H	Normal	120Sec	M	M	Zone1
150	496	77.19500	86.99500	H	Normal	120Sec	M	M	Zone1

CH	TAG	Frequency		Pwr			CH spacing		Zone
		Low	Hi	H/L	MON	TOT	TX	RX	
151	497	77.21500	87.01500	H	Normal	120Sec	M	M	Zone1
152	498	77.23500	87.03500	H	Normal	120Sec	M	M	Zone1
153	499	77.25500	87.05500	H	Normal	120Sec	M	M	Zone1
154	500	77.27500	87.07500	H	Normal	120Sec	M	M	Zone1
155	501	77.29500	87.09500	H	Normal	120Sec	M	M	Zone1
156	502	77.31500	87.11500	H	Normal	120Sec	M	M	Zone1
157	503	77.33500	87.13500	H	Normal	120Sec	M	M	Zone1
158	504	77.35500	87.15500	H	Normal	120Sec	M	M	Zone1
159	505	77.37500	87.17500	H	Normal	120Sec	M	M	Zone1
160	506	77.39500	87.19500	H	Normal	120Sec	M	M	Zone1
161	507	77.41500	87.21500	H	Normal	120Sec	M	M	Zone1
162	508	77.43500	87.23500	H	Normal	120Sec	M	M	Zone1
163	509	77.45500	87.25500	H	Normal	120Sec	M	M	Zone1
164	510	77.47500	0.00000	H	Normal	120Sec	M	M	Zone1
165	511	77.09750	86.09000	H	Normal	120Sec	M	M	
166	512	0.00000	0.00000	H	Normal	120Sec	M	M	
167	513	0.00000	0.00000	H	Normal	120Sec	M	M	
168	514	0.00000	0.00000	H	Normal	120Sec	M	M	
169	515	0.00000	0.00000	H	Normal	120Sec	M	M	
170	516	0.00000	0.00000	H	Normal	120Sec	M	M	
171	517	0.00000	0.00000	H	Normal	120Sec	M	M	
172	518	0.00000	0.00000	H	Normal	120Sec	M	M	
173	519	0.00000	0.00000	H	Normal	120Sec	M	M	
174	520	0.00000	0.00000	H	Normal	120Sec	M	M	

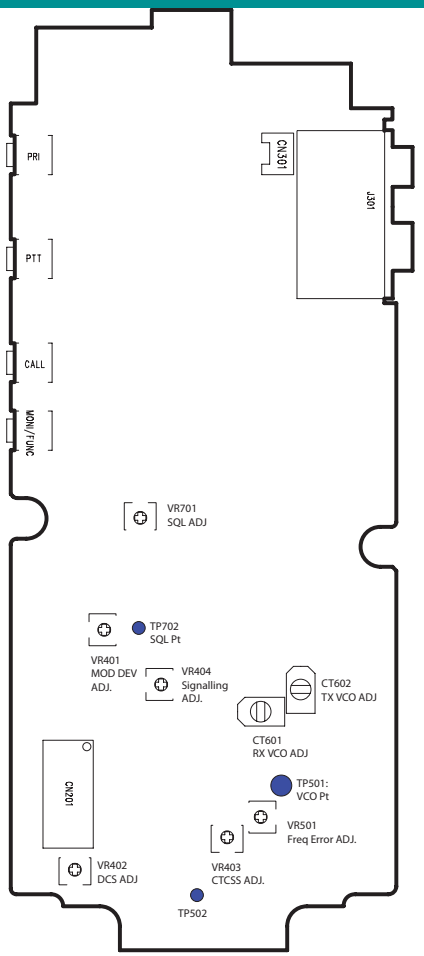

• VCO ADJUSTMENT

Connect test point (**TP501**) to multimeter for adjustment (ref alignment illustration).
Set channel=509 , to adjust the **CT601** obtain TP501 = **8. 6V** for Rx VCO at receiver mode. to adjust the **CT602** obtain TP501 = **8. 5V** for Tx VCO when PTT was activity

• FREQUENCY ERROR ALLGNMENT

Set channel=**509 wo** , to adjust the VR501 to get transmission frequency=**87.255MHZ ± 200Hz** when PTT was activity.

• DEVIATION ADJUSTMENT

Plug Mic jack from audio frequency generator.

Facilities setting: Audio generator=1KHz/80mV.

Set channel=**347 wu**, To adjust **VR401** to get maximum deviation **≥ 3.7KHz ≤ ±3.8KHz** when PTT was activity. Recheck Max. Dev **±3.5KHz**.at the channel **509 wo**.

1750Hz Adjustment: Set CH=**347 wu**, press burst tone I key to adjust **VR404** to get Max Dev **≥ ±3.5KHz ≤ ±3.8KHz** and check frequency is below **±20Hz**.
2135Hz checking: check burst tone II deviation is between **±3.5KHz to ±3.9KHz**. and check frequency error is below **±20H**.

• HIGH POWER CHECKING

Set channel=**509 wu/wo** , to check transmitter power is above **5W± 1W.**
The transmitter's power is above **5W** and current is below **2.0 ampere** by checking the other channels.

• LOW POWER CHECKING

Confirming the transmission power between **1.0W to 1.3Watts** at channel **347,416,486** and **509** with wu/wo. To make sure when battery voltage is below **6.4V** , the transmitter power was automatic changed to low power mode .

SENSITIVITY

To connect SINAD meter and 4 ohm dummy load

Apparatus setting: RF signal generator Frequency=**87.255MHz**, level=**0.43uV** , deviation=**2.4KHz** , AF=**1KHz** with CCITT filter

Set Channel=**509 wo**, press "monitor" button, observing the SINAD meter is above **20dB**
To confirm the channel=**347 wu/wo** as well.

• AUDIO OUTPUT

Apparatus setting : RF signal generator level=1mV

Increase volume to get audio output level equal 1Vrms check audio distortion ≤ 3%.
Rotate the volume to make audio output distortion=7%, to check maximum audio output is ≥ 0.5Watt.

• SQUELCH ADJUSTMENT

Turn off the RF signal generator output and connect multimeter on test point (TP702). open the squelch setting.

Set channel=**509 wo**
Adjusting the **VR701** obtain the SND equal with **16dB**.

• RSSI SIGNAL LEVEL CHECK

Turn on the RF signal generator output , setting RF level=**10uV**, make sure the signal meter is full on LCD indicator.

• BATTERY LOW DETECTION

Connect to DC power supply.
Adjust DC IN=**6.4V**, 1 battery bar is shown on LCD indicator when voltage in 6.4, increase voltage to 6.6V , checking 2 battery bar shown on LCD indicator, increase to 6. 9V , checking 3 battery bar shown on LCD indicator, increase to 7.2V , that will show full battery bar on LCD indicator.

4. BLOCK DIAGRAM

LOGIC CONTROL UNIT

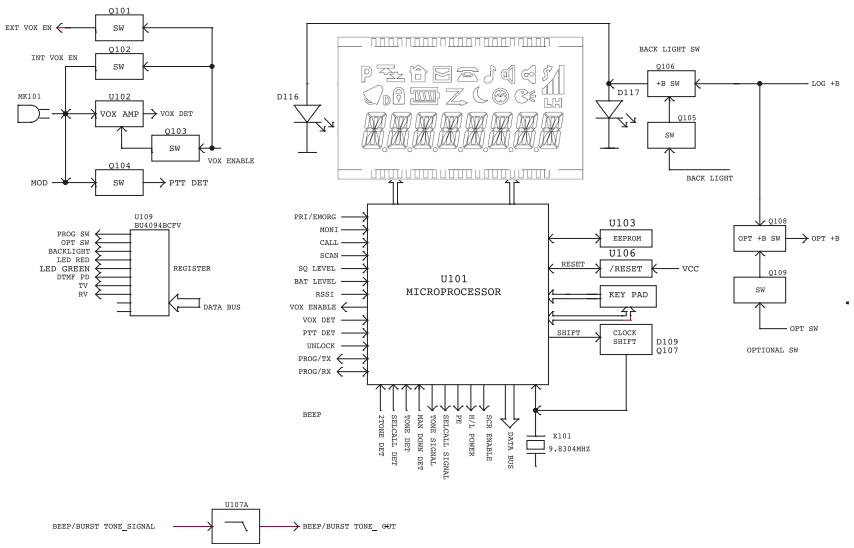

RF UNIT

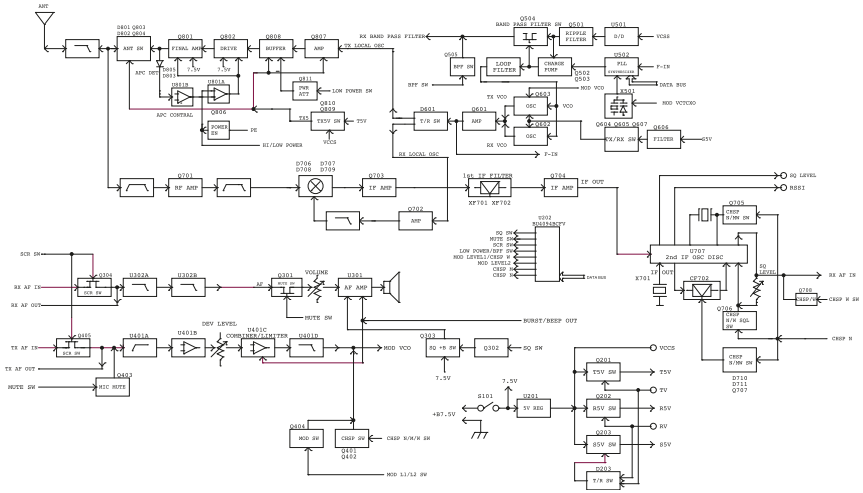

5. SCHEMATIC

• POWER SUPPLY

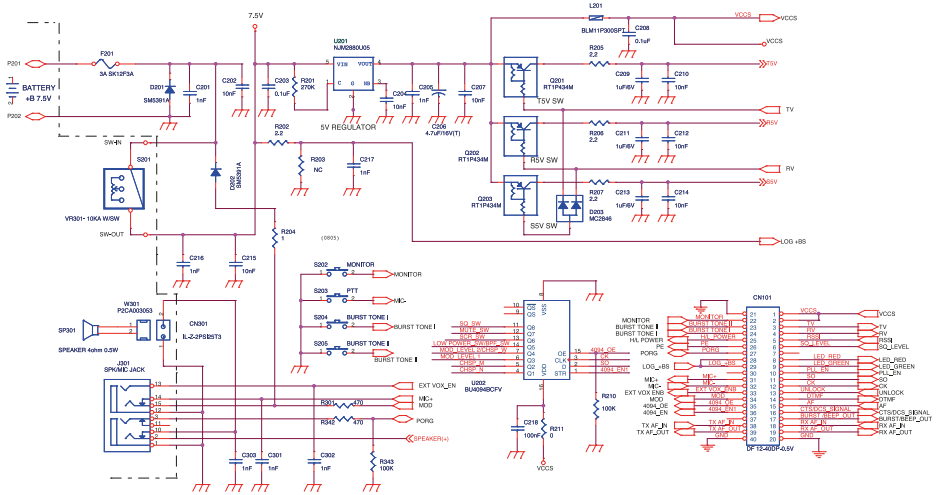

• FRONT-END

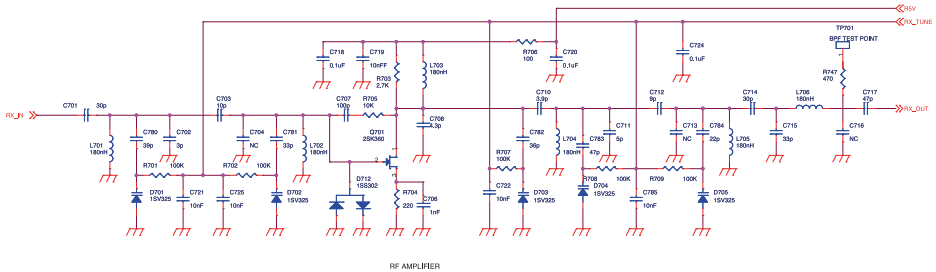

• 1ST IF & MIXER

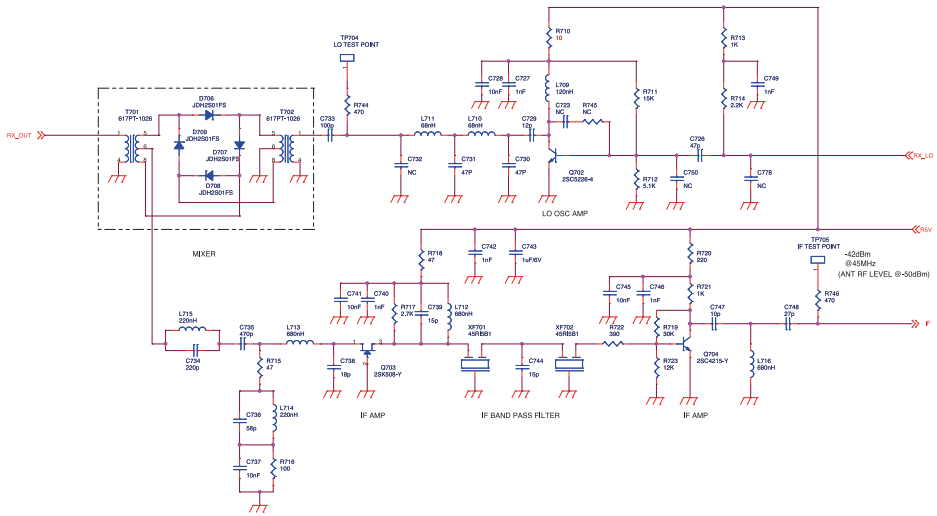

• SECOND IF

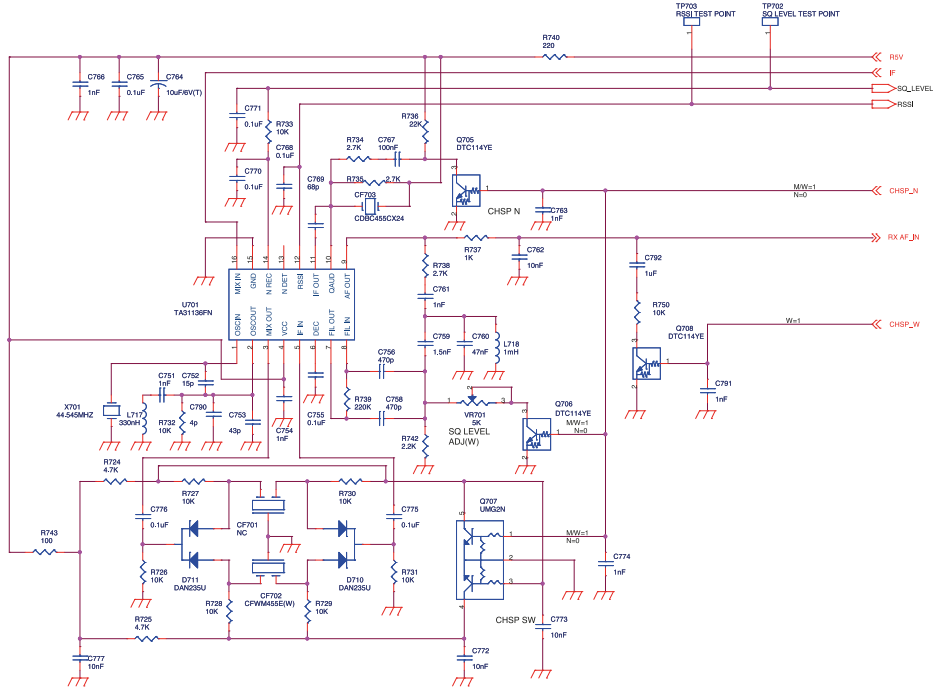

• AUDIO FILTER

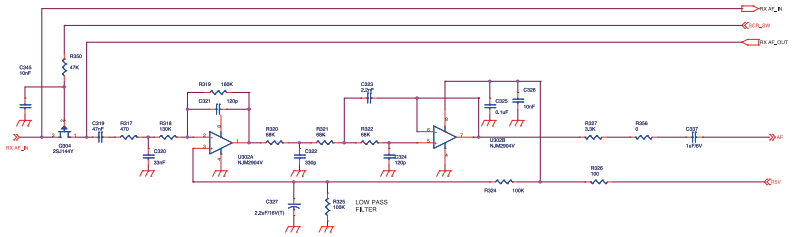

• AUDIO AMPLIFIER

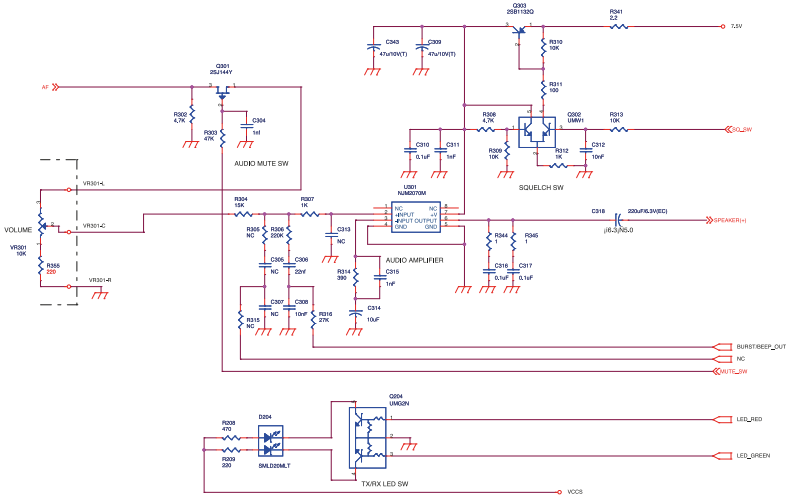

• MODULATION

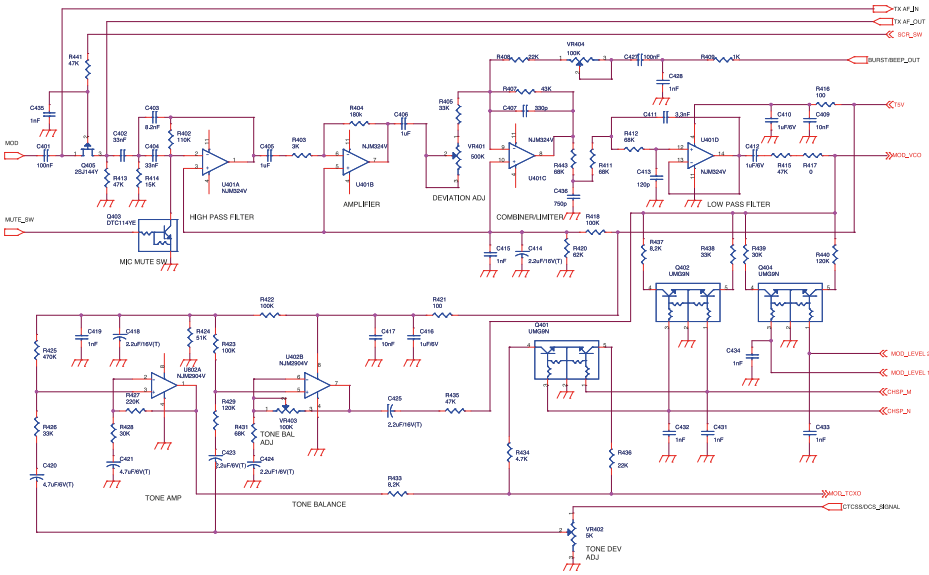

• SYNTHESIZER

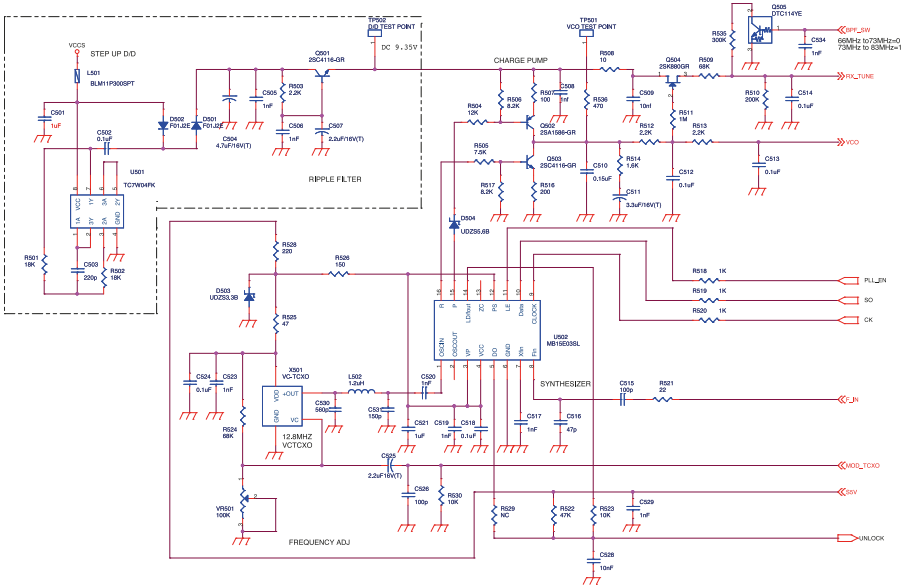

• VCO

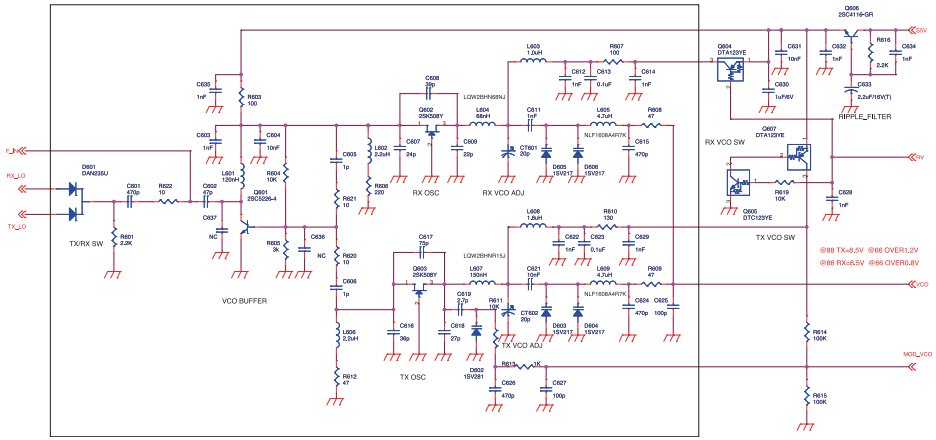

• TX BUFFER

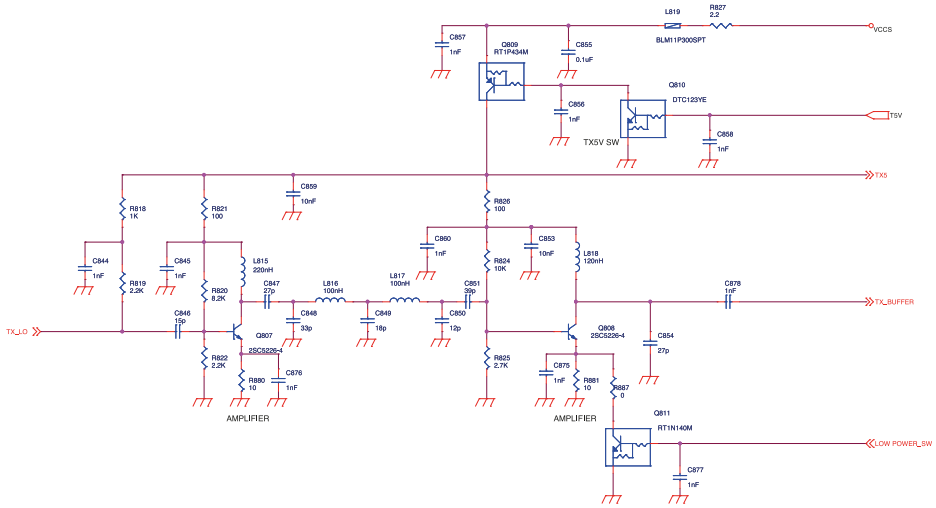

• RF POWER AMPLIFICATION

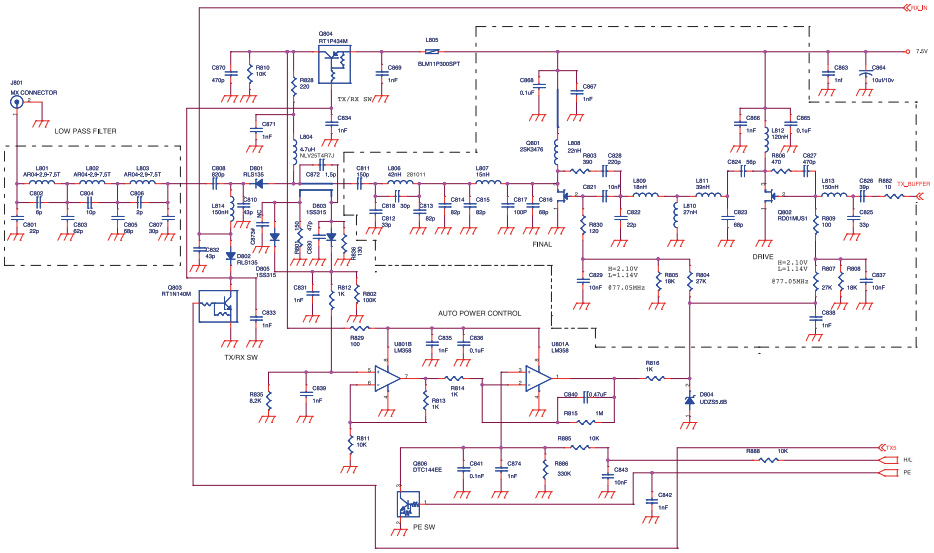

LOGIC CONTROL

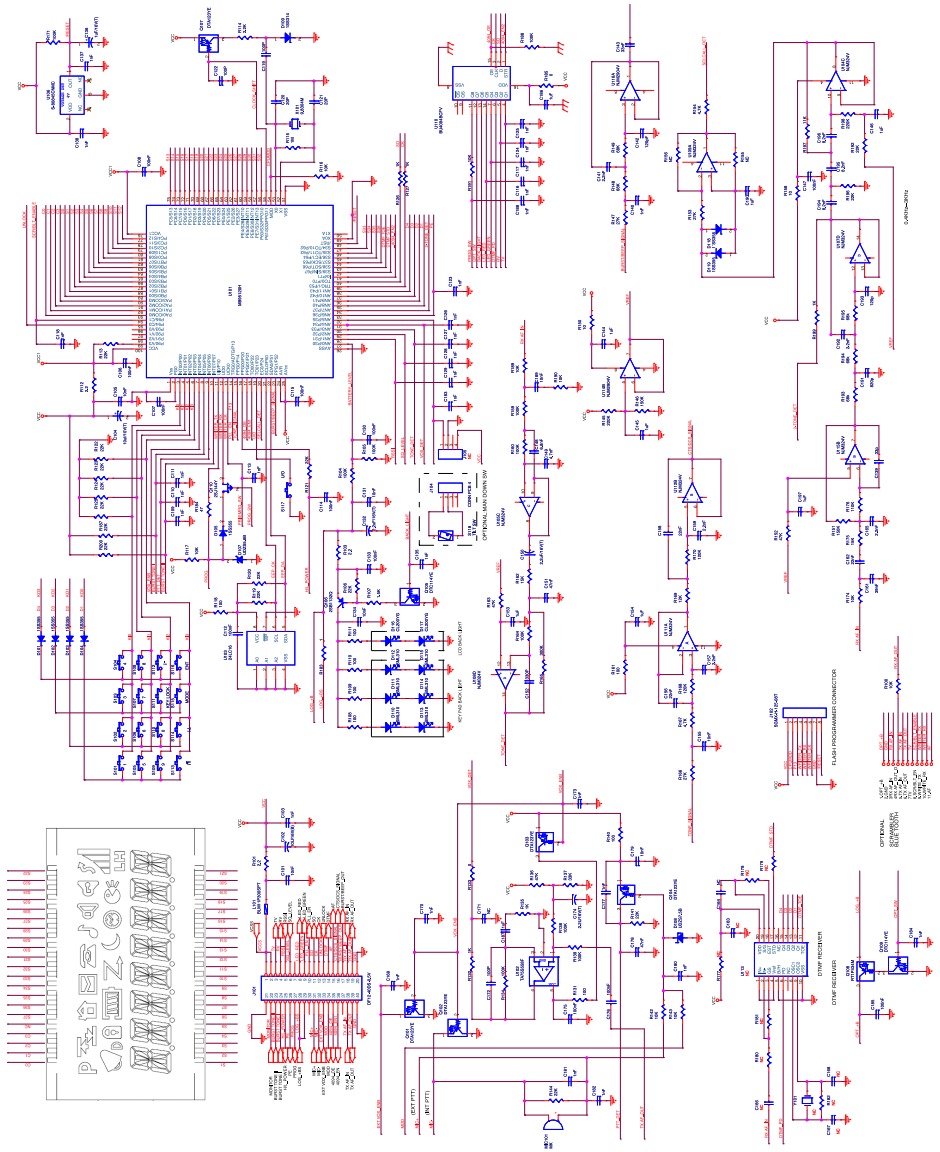

PCB VIEW

LOGIC BOARD

TOP SILKSCREEN

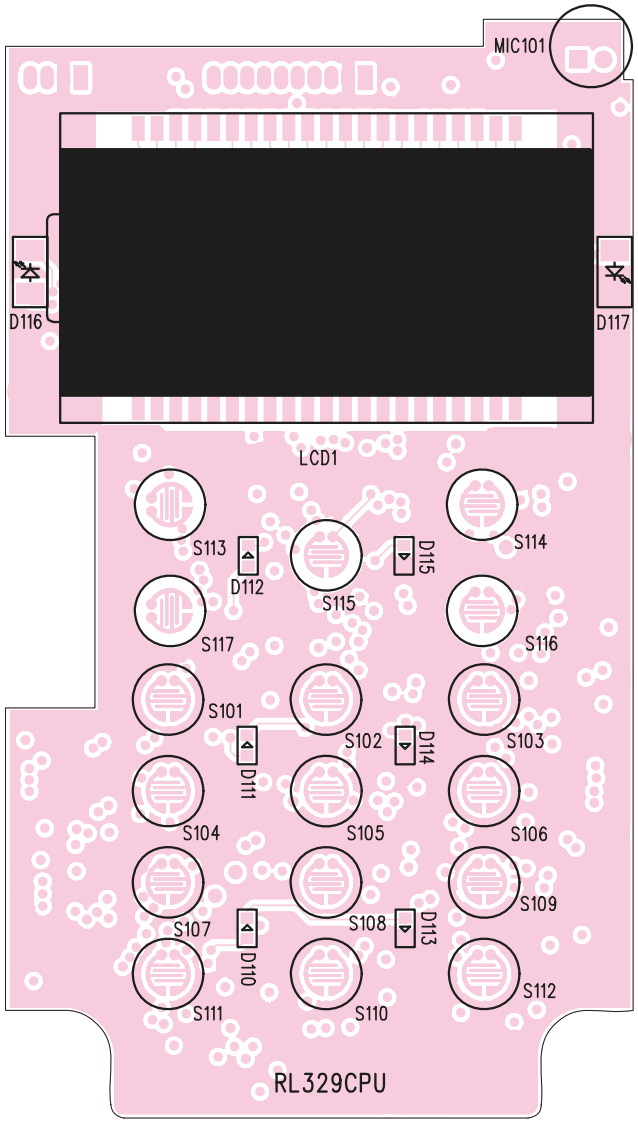

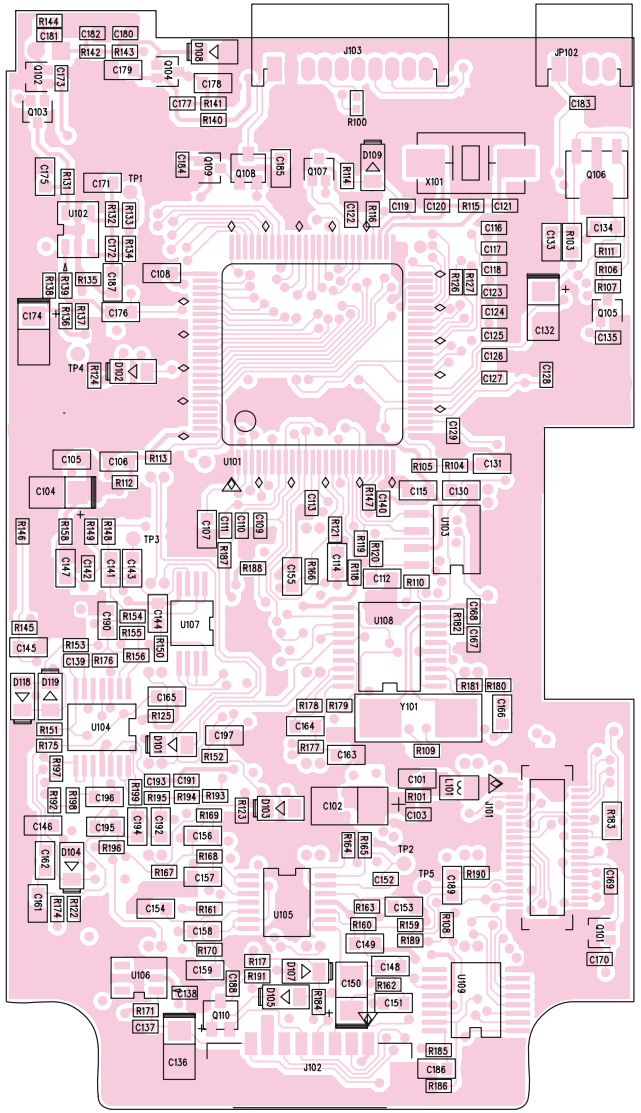

RF BOARD

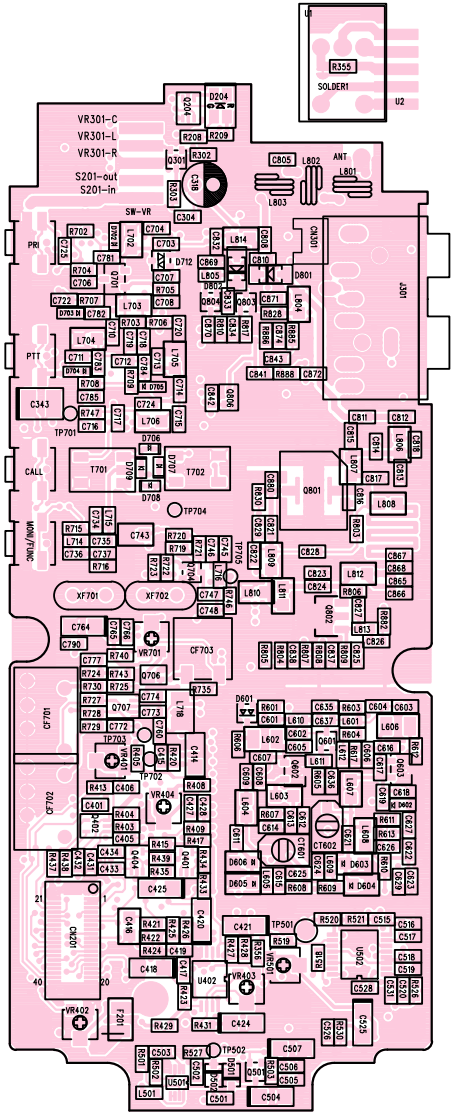
R355
SOLDER1
U2
VR301-C
VR301-L
VR301-R
S201-out
S201-in
SW-VR
PRI
PTT
CALL
MONI/FUNC
ANT.
J301
TP701
TP702
TP703
TP704
TP705
XF701
XF702
CF703
VR701
VR402
VR403
VR404
TP501
TP502
U402
U502
U504
F201
CN201
T701
T702
Q801
Q802
Q806
Q707
Q401
Q501
L801
L802
L803
L804
L805
L806
L807
L808
L809
L810
L811
L812
L813
L814
L701
L702
L703
L704
L705
L706
L707
L708
D801
D802
D803
D804
D805
D806
D807
D808
D809
D810
D811
D812
D813
D814
D815
D816
D817
D818
D819
D820
D821
D822
D823
D824
D825
D826
D827
D828
D829
D830
D831
D832
D833
D834
D835
D836
D837
D838
D839
D840

6. BILL OF MATERIALS

PART NUMBER	PARTSDESCRIPTION	EA	REFERENCE
334-00033-000	SHIPPING BAG (210LX105WX0.08T)	1	RL-4LA6
350-00161-000	LOGO PLATE (REXON)	1	M80
350-00162-018	LABEL REXON (TAIWAN) BP-21L	1	
350-00210-014	LABEL LIFE BOS RL-328SK FUG13B LIS2013	1	M79
351-00132-001	LABEL LIFE BOS	1	M81
351-00138-000	LABEL LIFE BOS RL-328SK FUG13B	1	M82
352-00130-009	MANUAL LIS2010 FUG13B LIFE BOS	1	
354-00139-029	GIFT BOX < LIS 2000 > SERIES	1	RDM42875
355-00054-000	FIX PLATE 410*440*3MM	0	RDM42628
356-00040-000	CARTON 455*420*255MM	0	RDM42627
390-00044-000	OXYGEN ABSORBERS (2G)	1	
	CHARGER SET ASS'Y		
800-00039-007	DC ADAPTOR DSA-20P-10EU 136163 SWITCHING	0	OPTIONAL
800-00064-000	DC ADAPTOR RL-328 MLF-012W1201000Z	1	OPTIONAL
801-09999-001	ANTENNA MX RL-328 VHF W/O CUTTING	1	
803-00045-009	LI-POLYMER BATTERY PACK BP-21L 7.2V 2050MAH BLK	1	
	BATTERY ASS'Y		
270-00007-000	LI-POLYMER BATTERY PACK 7.2V 2050MAH BLK	1	
310-00141-000	RELEASE SPRING 0.4MM SUS 301# 430-400	1	M024 RDM42448
334-00142-001	RELEASE BUTTON BLK	1	
805-00010-006	**CHARGER SET ASS'Y**	0	
334-00113-001	CHARGER NAME PLATE	0	RDM42621
334-00148-000	PE BAG 30MMX180MMX0.08T	0	
334-00150-000	LOGO PLATE RC-28L CHARGER BLK REXON	0	
351-00121-006	LABEL RC-28L LION CHARGER REXON	0	
390-00044-000	OXYGEN ABSORBERS (2G)	0	
805-00010-017	LI-POLYMER CHARGER	1	
334-00148-000	PE BAG 130MMX180MMX0.08T	1	
351-00121-006	LABEL RC-28L LION CHARGER REXON	1	

PART NUMBER	PARTSDESCRIPTION	EA	REFERENCE
390-00044-000	OXYGEN ABSORBERS (2G)	1	
312-00097-001	METAL TERMINAL TERMINAL_CHARGER	3	
334-00149-003	TOP COVER (CHARGER)	1	
334-00184-000	HOLDER RC-28L FAST CHARGER	1	
610-05007-00100	LI-ION CHARGER PCB APPCBAR328L-01	1	

	RF BOARD PART LIST		
PART NUMBER	**PARTSDESCRIPTION**	**EA**	**REFERENCE**
630-01329-00800	RF BOARD SURFACE MOUNTING	1	
100-00021-000	RES CHIP 0603 0Ω J	4	R211.R417.R887.R356
100-00025-000	RES CHIP 0603 100KΩ J	14	R210.R324.R325.R418.R422. R423.R614.R615.R701.R702. R707.R708.R709.R802
100-00026-000	RES CHIP 0603 100Ω J	14	R311.R326.R416.R421.R507. R603.R607.R706.R716.R743. R809.R821.R826.R829
100-00027-000	RES CHIP 0603 10KΩ J	23	R309.R310.R313.R523.R530. R604.R611.R619.R726.R727. R728.R729.R730.R731.R732. R750.R810.R811.R824.R885. R888.R705.R733
100-00028-000	RES CHIP 0603 10Ω J	8	R508.R880.R882.L610.L611. L612.R881.R710
100-00028-001	RES CHIP 0603 1Ω J	2	R344.R345
100-00029-000	RES CHIP 0603 110KΩ J	1	R402
100-00030-000	RES CHIP 0603 120KΩ J	1	R429
100-00031-000	RES CHIP 0603 120Ω J	1	R830
100-00032-000	RES CHIP 0603 12KΩ J	2	R504.R723
100-00034-000	RES CHIP 0603 130KΩ J	1	R318
100-00036-000	RES CHIP 0603 150Ω J	2	R526.R801
100-00037-000	RES CHIP 0603 15KΩ J	3	R304.R414.R711
100-00038-000	RES CHIP 0603 180KΩ J	1	R404
100-00040-000	RES CHIP 0603 18KΩ J	4	R501.R502.R805.R808
100-00042-000	RES CHIP 0603 1KΩ J	15	R307.R312.R409.R518.R519. R520.R613.R713.R721.R812. R813.R814.R816.R818.R737
100-00043-000	RES CHIP 0603 1MΩ J	2	R511.R815
100-00044-000	RES CHIP 0603 2.2KΩ J	9	R503.R512.R513.R601.R616. R714.R742.R819.R822
100-00046-000	RES CHIP 0603 2.2Ω J	6	R202.R205.R206.R207.R341. R827
100-00047-000	RES CHIP 0603 2.7KΩ J	6	R717.R734.R735.R738.R825. R703

RF BOARD PART LIST			
PART NUMBER	**PARTSDESCRIPTION**	**EA**	**REFERENCE**
100-00050-000	RES CHIP 0603 220KΩ J	1	R739
100-00051-000	RES CHIP 0603 220Ω J	8	R209.R528.R606.R720.R740. R828.R704.R355
100-00052-000	RES CHIP 0603 22KΩ J	3	R436.R736.R408
100-00053-000	RES CHIP 0603 22Ω J	1	R521
100-00054-000	RES CHIP 0603 270KΩ J	3	R201.R306.R427
100-00055-000	RES CHIP 0603 27KΩ J	3	R316.R804.R807
100-00058-000	RES CHIP 0603 3.3KΩ J	1	R327
100-00058-001	RES CHIP 0603 3KΩ J	2	R605.R403
100-00060-000	RES CHIP 0603 300KΩ J	1	R535
100-00062-000	RES CHIP 0603 30KΩ J	3	R428.R439.R719
100-00063-000	RES CHIP 0603 330KΩ J	1	R886
100-00065-000	RES CHIP 0603 33KΩ J	3	R405.R426.R438
100-00068-000	RES CHIP 0603 390Ω J	3	R314.R722.R803
100-00070-000	RES CHIP 0603 4.7KΩ J	5	R302.R308.R434.R724.R725
100-00073-000	RES CHIP 0603 470KΩ J	1	R425
100-00074-000	RES CHIP 0603 470Ω J	9	R208.R301.R342.R536.R744. R746.R747.R806.R317
100-00075-000	RES CHIP 0603 47KΩ J	7	R303.R350.R413.R415.R435. R441.R522
100-00076-000	RES CHIP 0603 47Ω J	6	R525.R608.R609.R715.R718. R612
100-00077-000	RES CHIP 0603 5.1KΩ J	1	R712
100-00085-000	RES CHIP 0603 6.8KΩ J	1	R835
100-00086-000	RES CHIP 0603 62KΩ J	1	R420
100-00089-000	RES CHIP 0603 68KΩ J	9	R320.R321.R322.R411.R412. R431.R443.R509.R524
100-00090-000	RES CHIP 0603 7.5KΩ J	1	R505
100-00092-000	RES CHIP 0603 8.2KΩ J	5	R437.R506.R517.R820.R433
100-00124-000	RES CHIP 0805 1Ω J	1	R204
100-00358-000	RES CHIP 0603 51KΩ J	2	R424.R440
100-00464-000	RES CHIP 0603 43KΩ J	1	R407
100-00474-000	RES CHIP 0603 200KΩ J	1	R510
100-00540-000	RES CHIP 0603 160KΩ J	1	R319
100-00561-000	RES CHIP 0603 200Ω J	1	R516
100-00595-000	RES CHIP 0603 130Ω J	2	R836.R610
100-00646-000	RES CHIP 0603 1.6KΩ J	1	R514
101-00008-002	RES TRIMMER TMC3KJB100KTR/ TC33X-2-104E	3	VR403.VR404.VR501
101-00008-007	RES TRIMMER TMC3KJB5KTR/ TC33X-2-502E	2	VR402.VR701
101-00008-009	RES TRIMMER TMC3KJB500KTR/ TC33X-2-504E	1	VR401
110-00001-000	CAP CHIP CERAMIC 0603 470PF NP0 50V J	9	C601.C615.C624.C626.C735. C756.C758.C827.C870

RF BOARD PART LIST			
PART NUMBER	**PARTSDESCRIPTION**	**EA**	**REFERENCE**
110-00014-000	CAP CHIP CERAMIC 0603 0.0015uF X7R 50V K	1	C759
110-00016-000	CAP CHIP CERAMIC 0603 0.001uF X7R 50V K	73	C201.C205.C216.C217.C301. C302.C303.C304.C311.C315. C415.C419.C428.C431.C432. C433.C434.C435.C505.C506. C508.C517.C519.C520.C523. C529.C534.C603.C611.C612. C614.C622.C628.C629.C632. C634.C635.C706.C727.C740. C742.C746.C749.C751.C754. C761.C763.C766.C774.C791. C831.C833.C834.C835.C838. C839.C842.C878.C844.C845. C856.C857.C858.C860.C863. C866.C867.C869.C871.C874. C875.C876.C877
110-00017-000	CAP CHIP CERAMIC 0603 0.0022uF X7R 50V K	1	C323
110-00019-000	CAP CHIP CERAMIC 0603 0.0033uF X7R 50V K	1	C411
110-00023-000	CAP CHIP CERAMIC 0603 0.0082uF X7R 50V K	1	C403
110-00027-000	CAP CHIP CERAMIC 0603 0.01uF X7R 50V K	37	C202.C204.C207.C210.C212. C214.C215.C308.C312.C326. C345.C409.C417.C509.C528. C604.C621.C631.C719.C721. C722.C725.C728.C737.C741. C745.C762.C772.C773.C777. C785.C821.C829.C837.C843. C853.C859
110-00029-000	CAP CHIP CERAMIC 0603 0.022uF X7R 50V K	1	C306
110-00033-000	CAP CHIP CERAMIC 0603 0.033uF X7R 25V K	3	C402.C404.C320
110-00037-000	CAP CHIP CERAMIC 0603 0.47uF 16V Y5V Z	2	C840.C337
110-00038-000	CAP CHIP CERAMIC 0603 0.047uF X7R 16V K	2	C319.C760
110-00043-000	CAP CHIP CERAMIC 0603 0.1uF X7R 16V K	33	C203.C208.C218.C310.C316. C317.C325.C401.C502.C512. C513.C514.C518.C524.C613. C623.C718.C720.C724.C755. C765.C767.C768.C770.C771. C775.C776.C836.C841.C855. C865.C868.C427

RF BOARD PART LIST			
PART NUMBER	**PARTSDESCRIPTION**	**EA**	**REFERENCE**
110-00049-000	CAP CHIP CERAMIC 0603 1.5PF NP0 50V C	1	C872
110-00051-000	CAP CHIP CERAMIC 0603 100PF NP0 50V J	7	C515.C526.C625.C627.C707. C733.C817
110-00054-000	CAP CHIP CERAMIC 0603 10PF NP0 50V D	3	C703.C747.C804
110-00058-000	CAP CHIP CERAMIC 0603 120PF NP0 50V J	3	C324.C413.C321
110-00059-000	CAP CHIP CERAMIC 0603 12PF NP0 50V J	2	C729.C850
110-00061-000	CAP CHIP CERAMIC 0603 150PF NP0 50V J	2	C531.C811
110-00062-000	CAP CHIP CERAMIC 0603 15PF NP0 50V J	4	C744.C752.C846.C739
110-00065-000	CAP CHIP CERAMIC 0603 18PF NP0 50V J	2	C738.C849
110-00067-000	CAP CHIP CERAMIC 0603 1PF NP0 50V C	2	C605.C606
110-00072-000	CAP CHIP CERAMIC 0603 220PF NP0 50V J	3	C503.C734.C828
110-00074-000	CAP CHIP CERAMIC 0603 22PF NP0 50V J	4	C609.C784.C801.C822
110-00076-000	CAP CHIP CERAMIC 0603 24PF NP0 50V J	1	C607
110-00077-000	CAP CHIP CERAMIC 0603 27PF NP0 50V J	4	C618.C748.C847.C854
110-00079-000	CAP CHIP CERAMIC 0603 2PF NP0 50V C	1	C806
110-00081-000	CAP CHIP CERAMIC 0603 30PF NPO 50V J	4	C701.C714.C807.C818
110-00082-000	CAP CHIP CERAMIC 0603 330PF NPO 50V J	1	C407
110-00083-000	CAP CHIP CERAMIC 0603 33PF NP0 50V J	5	C715.C781.C812.C825.C848
110-00085-000	CAP CHIP CERAMIC 0603 36PF NPO 50V J	2	C782.C616
110-00087-000	CAP CHIP CERAMIC 0603 39PF NP0 50V J	4	C608.C780.C826.C851
110-00088-000	CAP CHIP CERAMIC 0603 3PF NP0 50V C	1	C702
110-00090-000	CAP CHIP CERAMIC 0603 4.3PF NP0 50V C	1	C708
110-00092-000	CAP CHIP CERAMIC 0603 43PF NPO 50V J	2	C810.C832
110-00094-000	CAP CHIP CERAMIC 0603 47PF NP0 50V J	9	C516.C602.C717.C726.C730. C731.C753.C783.C830

RF BOARD PART LIST			
PART NUMBER	**PARTSDESCRIPTION**	**EA**	**REFERENCE**
110-00099-000	CAP CHIP CERAMIC 0603 560PF NP0 50V J	1	C530
110-00103-000	CAP CHIP CERAMIC 0603 56PF NP0 50V J	2	C736.C824
110-00104-000	CAP CHIP CERAMIC 0603 5PF NP0 50V C	1	C711
110-00105-000	CAP CHIP CERAMIC 0603 68PF NP0 50V J	4	C769.C805.C816.C823
110-00106-000	CAP CHIP CERAMIC 0603 6PF NP0 50V D	1	C802
110-00110-000	CAP CHIP CERAMIC 0603 82PF NP0 50V J	3	C813.C814.C815
110-00113-000	CAP CHIP CERAMIC 0603 9PF NP0 50V D	1	C712
110-00169-000	CAP CHIP CERAMIC 0805 1uF Y5V 16V Z	9	C209.C211.C213.C410.C412. C416.C521.C630.C743
110-00366-000	CAP CHIP TANT A 10uF 10V M	2	C314.C764
110-00368-000	CAP CHIP TANT A 2.2uF 16V M	9	C327.C414.C418.C423.C424. C425.C507.C525.C633
110-00370-000	CAP CHIP TANT A 3.3uF 16V M	1	C511
110-00371-000	CAP CHIP TANT A 4.7uF 16V	4	C206.C420.C421.C504
110-00372-002	CAP CHIP TANT A 10uF 16V M	1	C864
110-00413-000	CAP CHIP CERAMIC 0603 750PF NP0 25V J	1	C436
110-00457-001	CAP CHIP CERAMIC 0603 0.15uF X7R 16V K	1	C510
110-00462-000	CAP CHIP CERAMIC 0603 300PF NPO 50V J	1	C322
110-00598-000	CAP CHIP CERAMIC 0603 2.7PF NPO 50V C	1	C619
110-00484-000	CAP CHIP TANT B 47uF 10V M	2	C309.C343
110-00511-000	CAP CHIP CERAMIC 0603 3.9PF NPO 50V C	1	C710
110-00578-000	CAP CHIP CERAMIC 0603 1uF X7R 16V K	4	C792.C501.C405.C406
110-00599-000	CAP CHIP CERAMIC 0603 75PF NPO 50V J	1	C617
110-00600-000	CAP CHIP CERAMIC 0603 62PF NPO 50V J	1	C803
110-00613-000	CAP CHIP CERAMIC 0603 820PF X7R 50V K	1	C808
111-00008-001	CAP TRIMMER TZC03P200A110-T00 / SMD-020E	2	CT601.CT602
123-00006-000	COIL BLM11P300SPT/ BLM18PG300SNID	4	L201.L501.L805.L819

RF BOARD PART LIST			
PART NUMBER	**PARTSDESCRIPTION**	**EA**	**REFERENCE**
123-00043-000	INDUCTOR FLC32PC-T-102K (1mH)	1	L718
126-00018-004	INDUCTOR CHIP MLF1608DR33K	1	L717
126-00018-005	INDUCTOR CHIP MLF1608A1R2K 1.2uH	1	L502
126-00021-001	INDUCTOR CHIP NLV25T-4R7J-PF 4.7uH	1	L804
126-00027-025	INDUCTOR CHIP 0805C 1R0K 1.0uH	1	L603
126-00035-000	INDUCTOR CHIP 0805C-1.8uH	1	L608
126-00038-000	INDUCTOR CHIP LQH31MN2R2K03L	2	L602.L606
126-00051-000	INDUCTOR CHIP 0603 HI1608 1CR10JNT 100nH	2	L816.L817
126-00055-000	INDUCTOR CHIP 0805 HI2012 1CR68JNT 680nH	2	L712.L713
126-00064-000	INDUCTOR CHIP 0603 HI1608 1CR22JNT 220nH	3	L714.L715.L815
126-00066-000	INDUCTOR CHIP MLF1608DR68	1	L716
126-00070-000	COIL CHIP AIR WGA 1008 R015 15nH	1	L807
126-00071-000	COIL CHIP AIR WGA 1008 R018 18nH	1	L809
126-00072-000	COIL CHIP AIR WGA 1008 R022 22nH	1	L808
126-00084-000	INDUCTOR CHIP 0603 HI1608 1C68NJNT 68nH	2	L710.L711
126-00091-000	INDUCTOR CHIP 0603 HI1608 1CR12JNT 120nH	3	L601.L709.L818
126-00102-000	INDUCTOR CHIP LQW2BHNR15J01 150nH	1	L607
126-00103-000	INDUCTOR CHIP LQW2BHNR18J01 180nH	6	L701.L702.L703.L704.L705. L706
126-00104-000	INDUCTOR CHIP LQW2BHN68J01 68nH	1	L604
126-00105-000	INDUCTOR CHIP MLF1608A4R7K 4.7uH	2	L605.L609
126-00107-000	COIL CHIP SPRING SWI0805TR15J 150nH	1	L814
126-00109-000	CHIP AIR COIL E2L028*1.0*11TN	1	L806
126-00110-000	CHIP AIR COIL 1008 R027 27nH	1	L810
126-00111-000	CHIP AIR COIL 1008 R039 39nH	1	L811
126-00112-000	CHIP AIR COIL 1008 R120 120nH	1	L812

RF BOARD PART LIST			
PART NUMBER	**PARTSDESCRIPTION**	**EA**	**REFERENCE**
126-00113-000	INDUCTOR CHIP 0603 HI1608 1CR15JNT 150nH	1	L813
128-00009-000	TRANSFORMER 617PT-1669=P3	2	T701.T702
130-00022-000	DIODE 1SS302/TE85R	1	D712
130-00025-000	DIODE 1SS315	2	D803.D805
130-00032-000	DIODE 1SV217/TPH2-T6	4	D603.D604.D605.D606
130-00050-000	DIODE DAN235U/T-106	3	D601.D710.D711
130-00054-000	DIODE F01J2E	2	D501.D502
130-00095-000	DIODE MC2846-T11-1	1	D203
130-00101-000	DIODE RLS135/TE11	2	D801.D802
130-00124-001	DIODE ZENER ZENER UDZS TE-17 5.6B	2	D504.D804
130-00134-000	DIODE LED LED SML-020MLT-T86	1	D204
130-00195-000	DIODE 1SV281	1	D602
130-00197-001	DIODE JDH2S01FS (TOSHIBA)	4	D706.D707.D708.D709
130-00198-000	DIODE SM5391A	2	D201.D202
130-00199-000	DIODE ZENER ZENER DIODE UDZS TE-17 3.3B	1	D503
130-00205-000	DIODE CHIP 1SV325(TPH3)	5	D701.D702.D703.D704.D705
131-00015-000	TRANSISTOR 2SA1586GR	1	Q502
131-00020-000	TRANSISTOR 2SB1132Q-T101	1	Q303
131-00052-000	TRANSISTOR 2SC4116-GR TE85L	3	Q501.Q503.Q606
131-00055-000	TRANSISTOR 2SC4215Y SC-70 TOSHIBA	1	Q704
131-00077-000	TRANSISTOR DTA123YE/TE-TL	2	Q604.Q607
131-00077-001	TRANSISTOR DTC123YE	2	Q605.Q810
131-00086-000	TRANSISTOR DTC114YE TL	5	Q403.Q505.Q705.Q706.Q708
131-00088-000	TRANSISTOR DTC144EE TL	1	Q806
131-00106-000	TRANSISTOR RT1N140M-T11-1	2	Q803.Q811
131-00108-000	TRANSISTOR RT1P434M-T11-1/ DTA123YUA-T106	5	Q201.Q202.Q203.Q804.Q809
131-00116-000	TRANSISTOR UMG2N	2	Q204.Q707
131-00118-000	TRANSISTOR UMW1/TL	1	Q302
131-00198-000	TRANSISTOR 2SC5226-4	4	Q601.Q702.Q807.Q808
131-00239-000	TRANSISTOR UMG9N	3	Q401.Q402.Q404
132-00012-000	TRANSISTOR 2SK360 IGETL	1	Q701
132-00013-000	TRANSISTOR 2SK508 K52 T1B	3	Q602.Q603.Q703
132-00022-001	TRANSISTOR 2SK880GR	1	Q504
132-00024-000	TRANSISTOR 2SJ144Y	3	Q301.Q304.Q405
132-00025-000	TRANSISTOR 2SK3476	1	Q801
132-00026-000	TRANSISTOR RDO1MUS1	1	Q802
140-00098-000	IC NJM2070M TE2	1	U301

RF BOARD PART LIST			
PART NUMBER	**PARTSDESCRIPTION**	**EA**	**REFERENCE**
140-00140-000	IC TA31136FNG	1	U701
140-00192-000	IC LM358	1	U801
140-00342-000	IC TC7W04FK	1	U501
140-00343-000	IC MB15E03SL 16pin SSOP	1	U502
140-00344-000	IC NJM2904V	2	U302.U402
140-00345-000	IC NJM324V SSOP14	1	U401
140-00346-000	IC NJM2880U1-05	1	U201
140-00424-000	IC BU4094BCFV-E2	1	U202
150-00045-000	CRYSTAL FCX-04 44.545MHZ	1	X701
150-00060-000	CRYSTAL TCXO 12.8MHZ V12.80W2C00CR	1	X501
154-00006-000	DISCRIMINATOR CERAMIC CDBC455CX24-TX	1	CF703
200-00097-000	JACK CONNECTOR DF12 (5.0)-40DP-0.5V(86)	1	CN201
220-00046-000	SWITCH TACK TACK SWITCH EVQPUC02K	4	S202.S203.S204 .S205
250-00017-000	Fast Acting Surface Mount Fuse SF-1206F300-2	1	F201
260-00309-001	RF PCB BOARD PL292AC	1	
	CHARGER SET ASS'Y		
800-00039-007	DC ADAPTOR DSA-20P-10EU 136163 SWITCHING	0	OPTIONAL
800-00064-000	DC ADAPTOR RL-328 MLF-012W1201000Z	1	OPTIONAL
801-09999-001	ANTENNA MX RL-328 VHF W/O CUTTING	1	
803-00045-009	LI-POLYMER BATTERY PACK BP-21L 7.2V 2050MAH BLK	1	
	BATTERY ASS'Y		
270-00007-000	LI-POLYMER BATTERY PACK 7.2V 2050MAH BLK	1	
310-00141-000	RELEASE SPRING 0.4MM SUS 301# 430-400	1	M024 RDM42448
334-00142-001	RELEASE BUTTON BLK	1	
805-00010-006	CHARGER SET ASS'Y	0	
334-00113-001	CHARGER NAME PLATE	0	RDM42621
334-00148-000	PE BAG 30MMX180MMX0.08T	0	
334-00150-000	LOGO PLATE RC-28L CHARGER BLK REXON	0	
351-00121-006	LABEL RC-28L LION CHARGER REXON	0	
390-00044-000	OXYGEN ABSORBERS (2G)	0	
805-00010-017	LI-POLYMER CHARGER	1	
334-00148-000	PE BAG 130MMX180MMX0.08T	1	

RF BOARD PART LIST			
PART NUMBER	**PARTSDESCRIPTION**	**EA**	**REFERENCE**
351-00121-006	LABEL RC-28L LION CHARGER REXON	1	
390-00044-000	OXYGEN ABSORBERS (2G)	1	
312-00097-001	METAL TERMINAL TERMINAL_CHARGER	3	
334-00149-003	TOP COVER (CHARGER)	1	
334-00184-000	HOLDER RC-28L FAST CHARGER	1	
610-05007-00100	LI-ION CHARGER PCB APPCBAR328L-01	1	

LOGIC BOARD PART LIST			
PART NUMBER	**PARTSDESCRIPTION**	**EA**	**REFERENCE**
630-01329-01000	LOGIC BOARD SURFACE MOUNTING	1	
100-00001-000	RES CHIP 0402 100KΩ J	10	R104.R105.R134.R138.R139. R159.R160.R164.R171.R186
100-00002-000	RES CHIP 0402 100Ω J	8	R111.R118.R131.R140.R161. R108.R109.R110
100-00003-000	RES CHIP 0402 12KΩ J	1	R169
100-00004-000	RES CHIP 0402 1KΩ J	3	R132.R135.R199
100-00005-000	RES CHIP 0402 1MΩ J	1	R115
100-00006-000	RES CHIP 0402 220KΩ J	2	R145.R198
100-00011-000	RES CHIP 0402 33KΩ J	1	R137
100-00012-000	RES CHIP 0402 47KΩ J	3	R136.R152.R163
100-00028-001	RES CHIP 0603 1Ω J	1	R183
100-00046-000	RES CHIP 0603 2.2Ω J	1	R103
100-00521-000	RES CHIP 0402 220Ω F	2	R126.R127
100-00527-000	RES CHIP 0402 10KΩ F	10	R100.R116.R117.R142.R143. R174.R189.R190.R191.R144
100-00528-000	RES CHIP 0402 15KΩ F	2	R162.R175
100-00562-000	RES CHIP 0402 2.2KΩ J	1	R114
100-00563-000	RES CHIP 0402 4.7KΩ J	2	R167.R154
100-00599-000	RES CHIP 0402 47Ω J	1	R184
100-00606-000	RES CHIP 0402 22KΩ J	14	R106.R113.R119.R120.R121. R122.R123.R124.R125.R141. R187.R188.R192.R196
100-00607-000	RES CHIP 0402 27KΩ J	3	R147.R153.R166
100-00611-000	RES CHIP 0402 68KΩ J	5	R148.R149.R193.R194.R195
100-00616-000	RES CHIP 0402 10Ω J	2	R150.R158
100-00617-000	RES CHIP 0402 2.2Ω J	2	R101.R112
100-00624-000	RES CHIP 0402 300KΩ J	1	R165
100-00638-000	RES CHIP 0402 0Ω J	2	R133.R185
100-00641-000	RES CHIP 0402 150K F	2	R151.R146
100-00642-000	RES CHIP 0402 1.5K F	1	R107
100-00643-000	RES CHIP 0402 110KΩ J	1	R176
100-00644-000	RES CHIP 0402 11KΩ J	1	R197

LOGIC BOARD PART LIST

PART NUMBER	PARTSDESCRIPTION	EA	REFERENCE
100-00645-000	RES CHIP 0402 120KΩ J	2	R170.R168
110-00005-000	CAP CHIP CERAMIC 0402 0.001UF X7R 50V K TDK	29	C103.C109.C110.C111.C113. C116.C117.C118.C123.C124. C125.C126.C127.C128.C129. C135.C137.C138.C140.C169. C170.C173.C177.C180.C181. C182.C183.C184.C188
110-00008-000	CAP CHIP CERAMIC 0402 100PF NP0 50V J	3	C119.C122.C172
110-00017-000	CAP CHIP CERAMIC 0603 0.0022UF X7R 50V K	5	C141.C157.C159.C165.C192
110-00020-000	CAP CHIP CERAMIC 0603 0.0047UF X7R 50V K	1	C149
110-00022-000	CAP CHIP CERAMIC 0603 0.0068UF X7R 50V K	1	C148
110-00023-000	CAP CHIP CERAMIC 0603 0.0082UF X7R 50V K	3	C194.C195.C196
110-00029-000	CAP CHIP CERAMIC 0603 0.022UF X7R 50V K	3	C156.C158.C162
110-00033-000	CAP CHIP CERAMIC 0603 0.033UF X7R 25V K	1	C143
110-00036-000	CAP CHIP CERAMIC 0603 0.039UF X7R 16V K	1	C161
110-00038-000	CAP CHIP CERAMIC 0603 0.047UF X7R 16V K	2	C151.C178
110-00043-000	CAP CHIP CERAMIC 0603 0.1UF X7R 16V K	12	C106.C107.C108.C112.C114. C115.C130.C133.C147.C175. C176.C185
110-00366-000	CAP CHIP TANT A 10UF 10V M	1	C104
110-00367-000	CAP CHIP TANT A 1UF 35V M	1	C136
110-00368-000	CAP CHIP TANT A 2.2UF 16V M	3	C150.C132.C174
110-00372-000	CAP CHIP TANT B 10UF 16V M	1	C102
110-00469-000	CAP CHIP CERAMIC 0603 0.01UF X7R 50V J	7	C101.C105.C131.C134.C155. C179.C189
110-00541-001	CAP CHIP CERAMIC 0402 33PF NP0 50V J TDK	1	C139
110-00578-000	CAP CHIP CERAMIC 0603 1UF X7R 16V K	9	C144.C145.C146.C153.C154. C187.C190.C197.C186
110-00663-000	CAP CHIIP CERAMIC CER 0402 330PF X7R 50V J	1	C152
110-00686-000	CAP CHIIP CERAMIC CER 0402 120PF NPO 50V J	2	C142.C193
110-00687-000	CAP CHIIP CERAMIC CER 0402 820PF NPO 50V J	1	C191
110-00688-000	CAP CHIIP CERAMIC CER 0402 20PF NPO 50V J	2	C120.C121
123-00006-000	COIL BLM11P300SPT/ BLM18PG300SNID	1	L101

LOGIC BOARD PART LIST

PART NUMBER	PARTSDESCRIPTION	EA	REFERENCE
130-00024-000	DIODE 1SS314/TPH3	1	D109
130-00026-000	DIODE 1SS355	7	D101.D102.D103.D104.D105 . D118.D119
130-00124-000	DIODE ZENER ZENER UDZS7.5B	1	D108
130-00124-001	DIODE ZENER ZENER UDZS TE-17 5.6B	1	D107
130-00140-000	DIODE LED LED CL-200YG-C-T	2	D116.D117
130-00285-000	DIODE LED 19-213SYG/S530-E2/ TR8	6	D110.D111.D112.D113.D114 . D115
131-00020-000	TRANSISTOR 2SB1132Q-T101	1	Q106
131-00077-000	TRANSISTOR DTA123YE/TE-TL	5	Q101.Q102.Q103.Q104.Q107
131-00086-000	TRANSISTOR DTC114YE TL	2	Q105.Q109
131-00108-000	TRANSISTOR RT1P434M-T11-1/ DTA123YUA-T106	1	Q108
132-00024-000	TRANSISTOR 2SJ144Y	1	Q110
140-00001-000	IC 24LC16BT-I/SN	1	U103
140-00130-000	IC S-80845CNMC-B86T2G	1	U106
140-00145-000	IC TA75S558F	1	U102
140-00344-000	IC NJM2904V	1	U107
140-00345-000	IC NJM324V SSOP14	2	U104.U105
140-00423-000	IC MCU MB95F128H-M5 LQFP/ MB95F128	1	U101
140-00424-000	IC BU4094BCFV-E2	1	U109
150-00044-000	CRYSTAL FCX-02N 9.8304(50PPM)	1	X101
200-00096-000	CONNECTOR DF12-40DS-0.5V(86)	1	J101
200-00129-000	CONNECTOR SGMX-H-125-08T-R CONNECTOR	1	J102
260-00307-000	PL290AD	1	

MECHANICAL PARTS REFERENCES

REFER	PARTS NUMBER	DESCRIPTION	EA
M03	334-00192-000	FRONT COVER BLK ABS+PC	1
M06	333-00101-000	DISPLAY WINDOW RL-328SK	1
M07	330-00068-000	KEY PAD RL-328SK LIS USED	1
M08	333-00096-000	LENS LED	1
M10	311-00041-004	CHASSIS	1
M13	620-01329-00800	RF PCA w ASS'Y	1
M14	312-00093-000	SHIELD CAN- TX LPF	1
M15	312-00092-000	SHIELD CAN- MIXER	1
M16	312-00090-000	SHIELD CAN- VCO	1
M17	312-00091-000	SHIELD CAN- POWER	1

MECHANICAL PARTS REFERENCES

REFER	PARTS NUMBER	DESCRIPTION	EA
M19	202-00010-000	TERMINAL-BATTERY 3.2*2.7*8.95	2
M20	331-00064-000	COVER-MIC&SPK CONNECTER	1
M21	312-00115-000	SHIELD CAN- RX	1
M23	630-01329-01000	RL-328SK LOGIC NO DTMF SMT	1
M23	610-01329-01300	LOGIC BOARD PCA+ ASS'Y	1
M29	395-00002-000	MX CONNECTOR	1
M30	330-00050-000	RUBBER-MIC&SPK CONNECTOR	1
M31	311-00042-000	RUBBER-CHASSIS	1
M32	302-00016-000	NUT-VR	1
M33	311-00043-001	RUBBER-BATTERY TERMINAL	2
M34	300-00109-000	SCREW (Main) M2X3L NI	12
M36	300-00110-000	SCREW MX CONNECTER M2X4L NI	2
M38	390-00090-000	CUSHION-VCO	2
M40	390-00092-000	CUSHION-XTAL FIL	1
M41	390-00053-000	FELT-SPEAKER	1
M42	331-00047-000	BUSHING-MIC	1
M43	230-00021-000	SPEAKER AK-3604BB-1A1	1
M44	351-00135-000	TAPE-MIC OD=6.5 ID=3.5	1
M45	390-00122-000	FELT-MIC 6.8mm	1
M47	390-00123-000	SPONGE 52*4 T=0.5	1
M48	330-00052-000	GASKET-VR	1
M49	390-00117-000	CUSHION-RX	1
M50	334-00161-001	KNOB-VOLUME	1
M51	310-00142-000	KNOB SPRING	1
M52	330-00034-000	WASHER	2
M53	300-00021-000	SCREW TOP-BOTTOM M2.6X6.0L NI	2
M54	331-00063-000	MIC/SP JACK COVER	1
M55	304-00035-000	WASHER FW2.2*6.9*0.5	1
M56	310-00145-001	SCREW JACK COVER M2*8	1
M71	312-00052-000	NUT-ANTENNA	1
M72	330-00029-000	GASKET-ANTENNA	1
M83	232-00004-000	MICROPHONE MIC SKF-2746P / OB-27P44	1
	211-00055-001	WIRE ASS'Y IL-Z-2S-S125C3 L=60mm	1
M73	BELT CLIP ASS'Y		1
M74	310-00135-000	METAL BUCKLE-BRACKET	1
M75	310-00136-000	METAL BUCKLE-SPRING	1
M78	310-00137-001	HOOK- PIN	1
M77	310-00138-001	HOOK- SPRING	1
M75	334-00091-002	HOOK-BUCKLE BLK	1

MECHANICAL PARTS REFERENCES

REFER	PARTS NUMBER	DESCRIPTION	EA
	334-00068-000	SHIPPING BAG (70X150X0.05T)	1
	LCD ASS'Y		
M24	334-00166-000	LCD PANEL REFLECTION	1
M25	312-00107-000	LCD FRAME	1
M26	204-00012-000	CONNECTOR RUBBER 29.5*2.5*1.5	2
M27	161-00020-000	LCD PANEL SV-WT2936AGTZ	1
M28	312-00096-000	SHIELD CAN-CPU	1

7. EXPLOSION

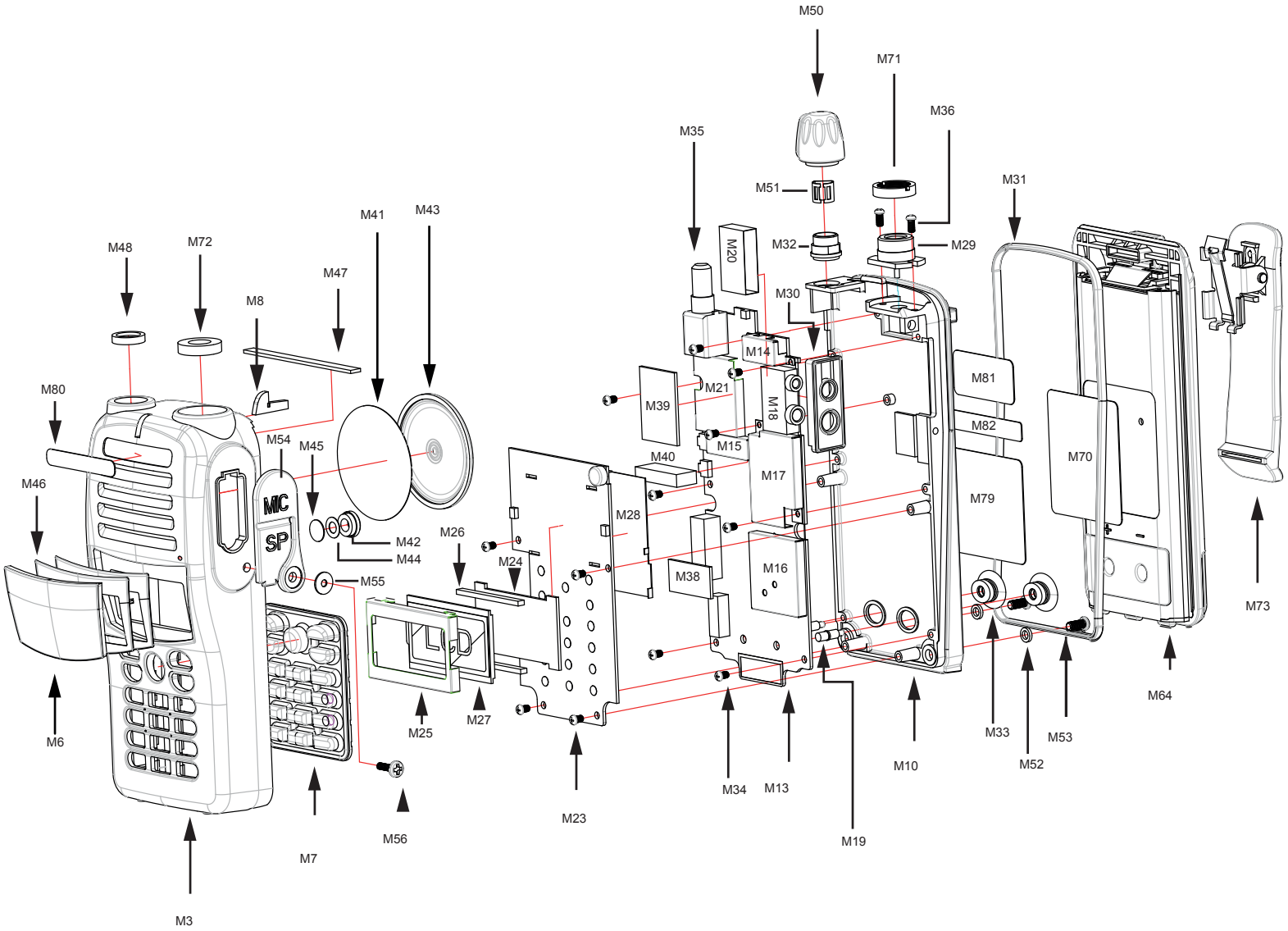

M50
M71
M36
M35
M51
M31
M41
M43
M48
M72
M47
M20
M32
M29
M8
M30
M14
M81
M80
M21
M39
M18
M82
M54
M45
M15
M40
M70
M46
MIC
SP
M17
M79
M28
M42
M26
M44
M24
M16
M55
M38
M73
M64
M6
M25
M27
M33
M53
M52
M10
M34
M13
M23
M56
M19
M7
M3